KIA METRO

GLB ENTERPRISES, LLC
Phone 214-884-6243
WWW.GLBFE.COM

GASOLINE-LPG

- 6th REV EDITION
- MPI ENG

SECTION NUMBER INDEX

ENGINE PARTS

CHASIS

BODY

SECTION	SECTION NAME	PAGE

ENGINE PARTS

1000A	CYLINDER HEAD & COVER	1
1000B	CYLINDER BLOCK & OIL PAN	3
1000C	TIMING COVER	6
1100A	PISTON, CRANKSHAFT & FLYWHEEL	8
1100B	BALANCE SHAFT	11
1200	VALVE SYSTEM	13
1300A	INTAKE & EXHAUST MANIFOLD	15
1300B	INTAKE & EXHAUST MANIFOLD (LPG)	17
1300B.1	INTAKE & EXHUAST MANIFOLD (MPI)	19
1300C	AIR CLEANER (GASOLINE- TRUCK)	22
1300D	AIR CLEANER (LPG-TRUCK)	24
1300D.1	AIR CLEANER (MPI-TRUCK)	26
1300E	AIR CLEANER (GASOLINE- VAN, COACH)	28
1300F	AIR CLEANER (LPG- VAN, COACH)	30
1300F.1	AIR CLEANER (MPI- VAN, COACH)	32
1300G	VENTILATION HOSE	34
1300H	INTAKE & EXHAUST SYSTEM (LPG: TRUCK)	36
1300I	INTAKE & EXHASUT SYSTEM (LPG: VAN & COACH)	38
1300J	EMISSION CONTROL SYSTEM (TRUCK)	40
1300K	EMISSION CONTROL SYSTEM (TRUCK-ONLY LEADED E/G)	43
1300L	LPG FUEL SYSTEM (TRUCK)	46
1300M	EMISSION CONTROL SYSTEM (VAN-COACH)	48
1300M.1	EMISSION CONTROL SYSTEM (MPI-TRUCK)	51

SECTION	SECTION NAME	PAGE
1300N	EMISSION CONTROL SYSTEM (VAN-COACH / LEADED GAS)	53
1300N.1	EMISSION CONTROL SYSTEM (MPI VAN-COACH)	56
1300O	LPG FUEL SYSTEM (VAN- COACH)	58
1300P	CARBURETOR (GASOLINE)	60
1300Q	MIXER (LPG)	62
1300R	VAPORIZER (LPG)	65
1400A	OIL PUMP	68
1400B	OIL FILTER	70
1500A	WATER PUMP	72
1500B	WATER OUTLET PIPING	74
1500C	COOLING SYSTEM (TRUCK)	76
1500D	COOLING SYSTEM (VAN-COACH)	78
1600	CLUTCH DISC & COVER	81
1700A	TRANSMISSION CASE	83
1700B	SPEEDOMETER GEAR	85
1700C	TRANSMISSION GEAR	87
1700D	CHANGE CONTROL TOP SYSTEM	91
1800A	ENGINE ELECTRICAL SYSTEM	94
1800A.1	ENGINE ELECTRICAL SYSTEM (MPI)	96
1800B	ALTERNATOR (MANDO)	98
1800C	ALTERNATOR (DAEWOO)	100
1800D	STARTER (MANDO)	102
1800E	STARTER (DAEWOO)	104
1800F	SWITCH & SENSOR (ENGINE)	105

SECTION	SECTION NAME	PAGE
1800G	DISTRIBUTOR	108

CHASSIS PARTS

2500	DRIVESHAFT	110
2600A	REAR AXLE	112
2600B	REAR BRAKE	114
2700	REAR DIFFERENTIAL	117
2800	REAR SUSPENSION	120
3200A	STEERING WHEEL	122
3200B	STEERING COLUMN & SHAFT	124
3200C	STEERING GEAR (RACK)	126
3200D	STEERING LINKAGE	129
3300A	FRONT AXLE	131
3300B	FRONT BRAKE CALIPER	133
3400	FRONT SUSPENSION MECHANISM	135
3700A	WHEEL & TIRE	138
3700B	SERVICE TOOLS	140
3900	ENGINE & TRANSMISSION MOUNTING	142
4000A	EXHUST SYSTEM (TRUCK)	144
4000B	EXHAUST SYSTEM (VAN-COACH)	146
4100	ACCELERATOR CONTROL SYSTEM	148
4200A	FUEL PIPE & CLAMP (GASOLINE)	150
4200B	FUEL FILTER (GASOLINE)	152
4200B.1	FUEL FILTER (MPI)	154
4200C	FUEL SYSTEM (TRUCK)	156

SECTION	SECTION NAME	PAGE
4200C.1	FUEL SYSTEM (MPI TRUCK)	159
4200D	LPG FUEL SYSTEM (TRUCK)	162
4200E	FUEL SYSTEM (VAN –COACH)	164
4200E.1	FUEL SYSTEM (MPI VAN-COACH)	167
4200F	LPG FUEL SYSTEM (VAN- COACH)	170
4310A	CLUTCH & BRAKE PEDALS	172
4310B	BRAKE MASTER CYLINDER	174
4320	MAIN BRAKE PIPING	176
4400	PARKING BRAKE SYSTEM (TRUCK)	178
4400.1	PARKING BRAKE SYSTEM (VAN- COACH)	179
4510	BRAKE & CLUTCH PIPING (TRUCK)	181
4510.1	BRAKE & CLUTCH PIPING (VAN- COACH)	182
4600A	SHIFTER	185
4600B	SHIFTER (MPI)	188

BODY PARTS

0900	KEY SET	191
5010	FRONT & REAR BUMPER	193
5020A	HEAD LAMP & FRONT COMBINATION LAMP	195
5020B	FRONT TURN SIGNAL & FOG LAMP	197
5020C	REAR COMBINATION LAMPS	199
5020D	LICENSE LAMP	201
5020E	CAB LAMP	203
5020F	BACK-UP LAMP	204

SECTION	SECTION NAME	PAGE
5030A	SIDE MOULDING (OPT)	207
5030B	SIDE STEP (OPT)	209
5030C	ONAMENTS (TRUCK)	211
5030D	ORNAMENTS (VAN & COACH)	213
5030E	ORNAMENTS	215
5030F	REAR SPOILER	217
5300A	FRONT PANEL	219
5300B	SIDE PANELS (TRUCK)	221
5300C	SIDE PANELS (VAN-COACH)	224
5300D	ROOF PANELS	228
5300E	FRONT FLOOR PANEL (TRUCK)	230
5300F	FRONT FLOOR PANEL (VAN-COACH)	233
5300G	REAR FLOOR PANEL	236
5300H	FRONT FLOOR FRAME (TRUCK)	240
5300I	FRONT FLOOR FRAME (VAN-COACH)	243
5300J	REAR FLOOR FRAME	246
5510A	DASHBOARD & RELATED PARTS	250
5510B	CONSOLE	252
5520A	SPEEDOMETER CABLE	254
5520B	METER	256
5610	SPARE TIRE CARRIER	258
5620	DAMPING SHEET	260
5710A	FRONT SEAT	262
5710B	REAR SEAT NO.1	267

SECTION	SECTION NAME	PAGE
5710C	REAR SEAT NO.2	271
5720	SEAT BELTS	273
5730	INTERIOR (TRAVELING CASH BOX)	275
5800	FRONT DOOR (BODY & TRIM)	277
5830	FRONT DOOR MECHANISMS	281
6110A	HEATER CONTORL & AIR DUCT	284
6110B	FRONT HEATER	286
6110C	HEATER PIPING (TRUCK)	288
6110D	HEATER PIPING (VAN-COACH)	290
6110E	REAR HEATER	293
6120A	AIR CONDITIONER (DOO WON-VAN COACH)	296
6120B	AIR CONDITIONER (DOO WON-TRUCK LPG)	300
6120C	AIR CONDITIONER (DOO WON-TRUCK)	303
6120D	AIR CONDITIONER (POONG SUNG)	307
6120E	COOLER UNIT & MAIN CONDENSER (DOO WON VAN-COACH)	311
6120F	COOLER UNIT & MAIN CONDENSER (DOO WON TRUCK)	313
6120G	COLLER UNIT & MAIN CONDENSER (POONG SUNG)	315
6200	BACK DOOR (BODY & TRIM)	317
6310	WINDOW GLASS	320
6320	BACK DOOR MECHANISM	322
6500	TRUCK BED	324
6610A	WIRING HARNESS	328
6610B	ENGINE WIRING HARNESS	332
6610B.1	ENGINE WIRING HARNESS (MPI)	334

SECTION	SECTION NAME	PAGE
6610C	BATTERY & CARRIER	336
6620A	SWITCH & RELAY	338
6620B	RELAY	341
6620C	HORN	343
6630	AUDIO SYSTEM	345
6640A	WINDSHIELD WIPER & WASHER	347
6640B	WINDOW WIPER (REAR)	350
6650	SPECIAL ELECTRIC (TRAVELING CASH BOX)	352
6800A	TOP CEILING	356
6800B	INSIDE TRIM	358
6800C	FLOOR MATS & PADS	360
6910A	SUN VISORS & ASSIST HANDLES	364
6910B	PARTITION PANEL	366
6920	CAUTION PLATES & LABELS	368
6930	SUN ROOF	370
6940	MIRRORS	372
7200	REAR DOOR (BODY & TRIM)	374
7230A	REAR DOOR WINDOW REGULATOR	378
7230B	REAR DOOR MECHANISM	380

KIA METRO

ENGINE PARTS

1000A CYLINDER HEAD & COVER

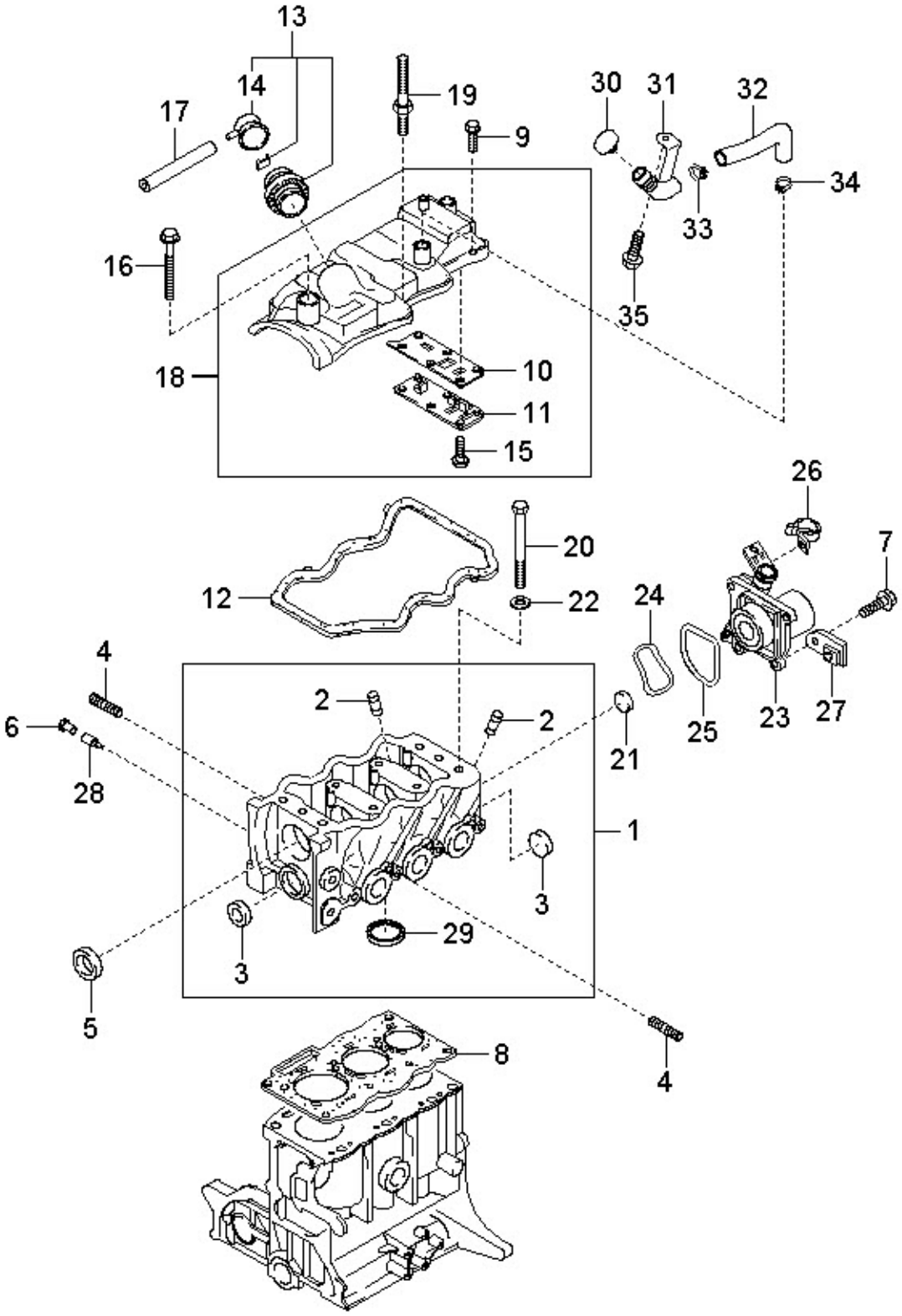

1000A CYLINDER HEAD & COVER

NO	PARTS NAME	PARTS NUMBER	ALL	TRK	VAN	COH	NOTE
1	CYLINDER SUB ASM	AA100-10-100B	1				
		AA13A-10-100D	1				LPG
2	VALVE GUIDE BUSHING	AA100-10-281 (AA13A-10-281)	6				
		AA13A-10-281	6				LPG
3	PLUG	D96411-13500	2				
4	BOLT STUD	AA100-10-3A3	10				
5	OIL SEAL “T” TYPE	AA100-10-1A0	1				
6	TUBE	AA100-13-5H8	1				
7	PLUG, W/HEAD STRAIGHT SCREW	AA100-10-2A1	2				
8	CYLINDER HEAD GASKET	AA100-10-271 (AA100-10-271B)	1				
10	GASKET	AA100-10-229	1				
11	VENTILATION BAFFLE PLATE	AA100-10-225	1				
12	CYLINDER HEAD COVER GASKET	AA100-10-235	1				
13	OIL FILLER CAP	AA100-10-275A (OK9A210250A)	1				
14	OIL SEPARATOR CAP	AA100-10-278B	1				
15	OIL FILLER INNER CAP	AA100-10-277	1				
16	CLAMP	AA100-13-2E1	1				
17	OIL FILLER CAP HOSE SUB ASM	AA100-13-743	1				
18	CYLINDER HEAD COVER ASM	AA100-10-220F	1				
19	BOLT STUD	AA100-10-3A2		2	3	3	
20	BOLT	AA100-10-4A3	8				
23	DISTRIBUTOR HOUSING	AA100-10-147B	1				
24	WAVE WASHER	AA100-10-1B0	1				
25	O’RING	AA100-10-1B1	1				

1000B CYLINDER BLOCK & OIL PAN

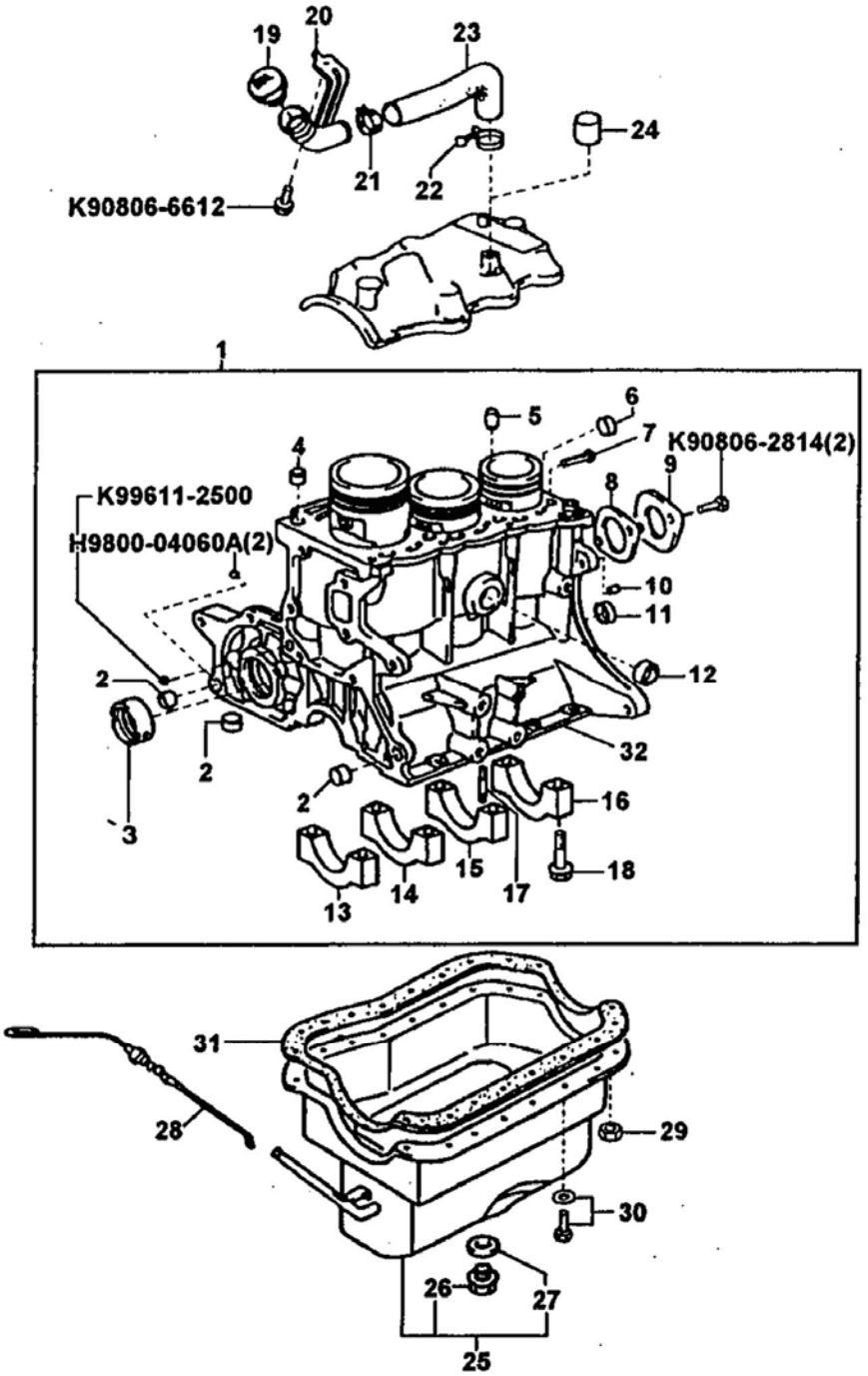

1000B CYLINDER BLOCK & OIL PAN

NO	PARTS NAME	PARTS NUMBER	ALL	TRK	VAN	COH	NOTE
	COMPLETE ENGINE ASM	AA100-02-000	1				
1	CYLINDER BLOCK ASM	AA100-10-310B	1				
2	RING PIN	AA100-10-5J4	6				
3	BALANCE FORMED NO.1 BUSHING	AA100-10-304	1				
4	RING PIN	AA100-10-4J3	2				
5	CYLINDER BLOCK ORIFICE	AA100-10-304	1				
6	PLUG	D96411-12500	1				
7	SCREW PLUG	AA100-10-1J0	1				
8	BALANCE SHAFT GASKET	AA100-10-658A	1				
9	BALANCE SHAFT REAR COVER	AA100-10-657	1				
10	STRAIGHT PIN	AA100-10-3J2	1				
11	BALANCE FORMED NO.2 BUSHING	AA100-10-731A	2				
12	PLUG	D96411-13000	1				
13	BEARING CAP NO.1	AA100-10-351A	1				
14	BEARING CAP NO.2	AA100-10-35AA	1				
15	BEARING CAP NO.3	AA100-10-35BA	1				
16	BEARING CAP NO.4	AA100-10-35CA	1				
17	STUD BOLT	AA100-10-3E3	2				
18	BOLT	AA100-10-2J1	8				
19	OIL FILLER CAP	AA100-10-251A		1			
20	OIL FILLER TUBE SUB. ASM	AA100-10-421		1			
21	HOSE CLIP	AA100-10-4A1		1			
22	HOSE CLAMP	K99282-3600	1				
23	OIL FILLER HOSE	AA100-10-422		1			
24	HOSE PLUG	AA110-10-4B1			1	1	
25	OIL PAN SUB. ASM	AA100-10-400C	1				
26	OIL PAN DRIAN PLUG	AA100-10-404	1				
27	OIL PAN DRAIN PLUG GASKET	K99564-1400	1				
28	OIL LEVEL GAGE (DIPSTICK)	AA100-10-450 (AA16A-10-450A)	1				
29	NUT	KK150-10-468	6				

1000B CYLINDER BLOCK & OIL PAN

NO	PARTS NAME	PARTS NUMBER	ALL	TRK	VAN	COH	NOTE
30	WASHER & BOLT	AA100-10-468	14				
31	OIL PAN GASKET	AA100-10-431	1				
	GASKET SET	AA100-10-999A	1				

1000C TIMING COVER

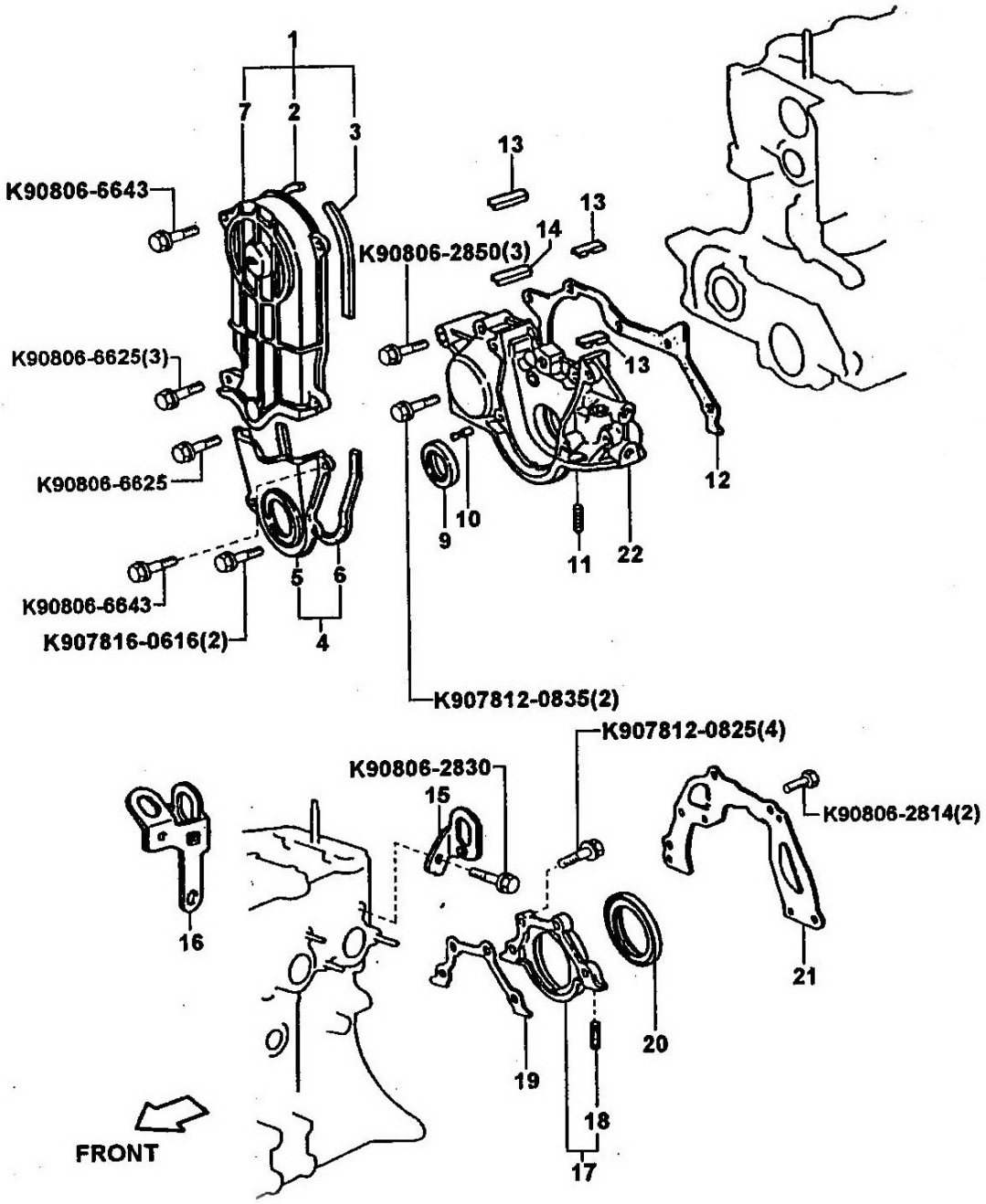

1000C TIMING COVER

NO	PARTS NAME	PARTS NUMBER	ALL	TRK	VAN	COH	NOTE
1	TIMING BELT UPPER COVER SUB ASM	AA100-10-510C	1				
2	DUST SEAL	AA100-10-512	1				
3	DUST SEAL	AA100-10-513	1				
4	TIMING BELT LOWER COVER	AA100-10-501C	1				
5	TIMING BELT LOWER COVER	AA100-10-501C	1				
6	DUST SEAL	AA100-10-502	1				
7	TIMING BELT UPPER COVER	AA100-10-511C	1				
9	OIL SEAL TYPE “T”	AA100-10-3E2	1				
10	PIN	AA100-10-3E4	1				
11	BOLT STUD	AA100-10-3E3	1				
12	BALANCE SHAFT GEAR COVER GASKET	AA100-10-662	1				
13	DUST SEAL	AA100-10-292	1				
14	DUST SEAL	AA100-10-2F1	1				
15	NO.1 ENGINE HANGAR	AA100-10-551	1				
16	NO.2 ENGINE HANGAR	AA16A-10-561A	1				
16-1	NO.2 ENGINE HANGAR	AW100-10-561	1				MPI E/G
17	OIL SEAL RETAINER SUB ASM	AA100-10-310	1				
18	BOLT STUD	AA100-10-3E3	2				
19	OIL SEAL RETAINER GASKET	AA100-10-318	1				
20	OIL SEAL TYPE “T”	AA100-10-1H0A	1				
21	REAR END PLATE	AA100-10-901	1				
22	BALANCE SHAFT GEAR COVER	AA100-10-661C	1				

1100A PISTON, CRANKSHAFT & FLYWHEEL

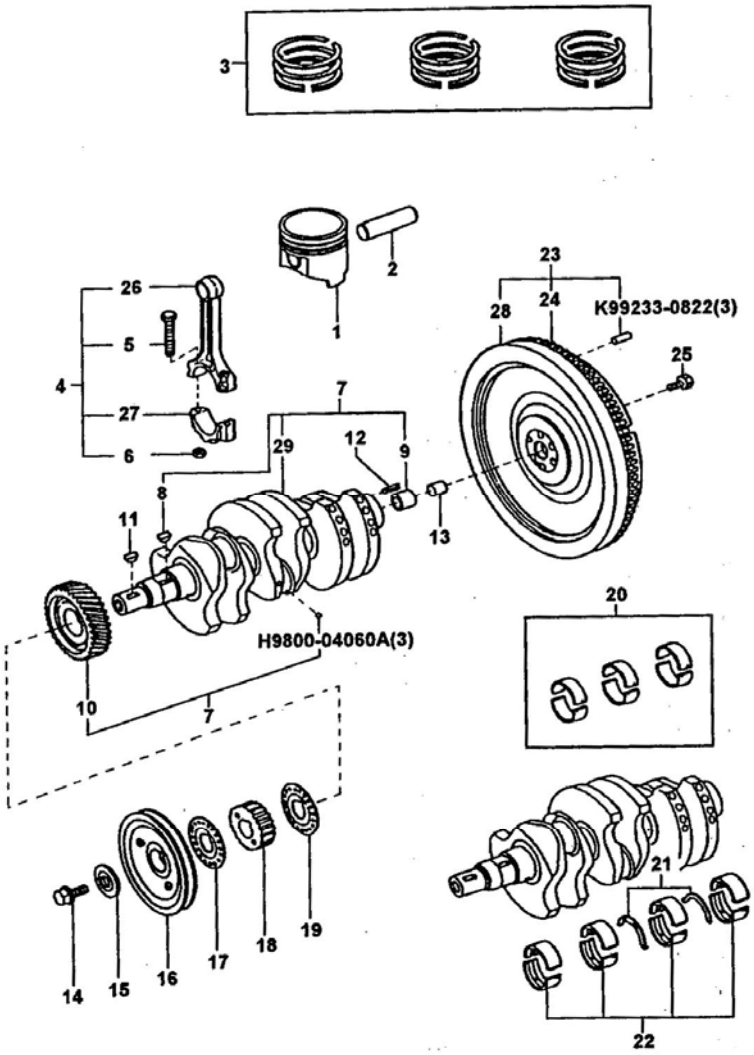

1100A PISTON, CRANKSHAFT & FLYWHEEL

NO	PARTS NAME	PARTS NUMBER	ALL	TRK	VAN	COH	NOTE
1	PISTON	AA100-11-102C	3				
2	PISTON PIN	AA16A-11-201	3				
3	PISTON RING SET NO.1	AA100-11-122B	1				
		AA101-11-122					ROK
	PISTON RING SET NO.2	AA100-11-132	1				
		AA101-11-132	1				ROK
	PISTON RING SET NO.3	AA100-11-140A	1				
		AA101-11-140	1				ROK
4	CONNECTING ROD ASM	AA100-11-210C	3				
5	CONNECTING ROD BOLT	AA100-11-214B	6				
6	CONNECTING ROD NUT	AA100-11-215	6				
7	CRANKSHAFT	AA100-11-300B	1				
8	WOODRUFF KEY	AA100-11-319	1				
9	BUSHING	AA100-11-303	1				
10	BALANCE SHAFT DRIVE GEAR	AA100-11-722	1				
11	WOODRUFF KEY	AA100-11-319	1				
12	SLOTTED PIN	AA100-11-304	1				
13	CRANKSHAFT REAR END FELT	AA100-11-307	1				
	CRANKSHAFT REAR MAIN SEAL	AA100-11-1H0	1				
14	WASHER & BOLT	AA100-11-40A	1				
15	PLATE WASHER	AA100-11-373	1				
16	CRANKSHAFT PULLEY	AA100-11-401	1				
17	CRANSHAFT TIMING BELT PULLEY FLANGE	AA100-11-414	2				
18	CRANKSHAFT TIMING BELT PULLEY	AA100-11-321A	1				
20	CONNECTING ROD BEARING SET	AA100-11-225B	1				
21	CRANKSHAFT THRUST WASHER	AA100-11-383	2				

1100A PISTON, CRANKSHAFT & FLYWHEEL

22	CRANKSHAFT UPPER BEARING	AA100-11-351A	4				
	CRANKSHAFT LOWER BEARING	AA100-11-851	4				
23	FLYWHEEL ASM	AA100-11-500A	1				
24	GLYWHEEL RING GER	AA100-11-502B	1				
25	BOLT	AA100-11-511	6				
26	CONNECTING ROD	AA100-11-211D	3				
27	CONECTING ROD CAP	AA100-11-212A	3				
28	FLYWHEEL	AA100-11-501D	1				
29	CRANKSHAFT	AA100-11-301C	1				

1100B BALANCE SHAFT

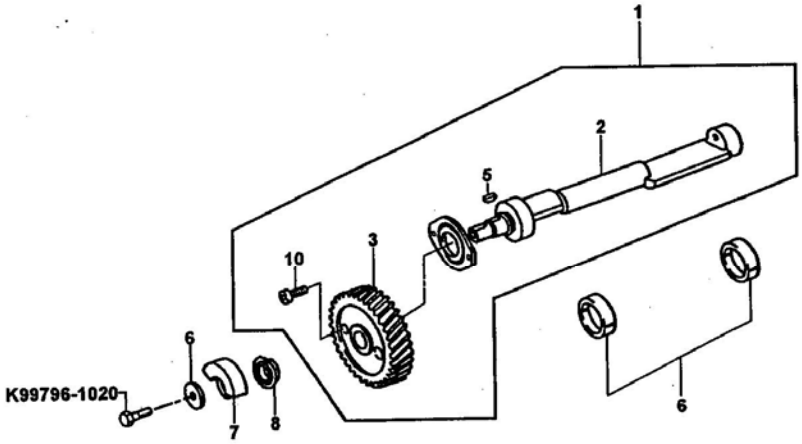

1100B BALANCE SHAFT

NO	PARTS NAME	PARTS NUMBER	ALL	TRK	VAN	COH	NOTE
1	BALANCE SHAFT ASM	AA100-11-710A	1				
2	BALANCE SHAFT	AA100-11-711A	1				
3	BALANCE SHAFT GEAR	AA100-11-712	1				
4	BALANCE SHAFT THRUST PLATE	AA100-11-704	1				
5	WOODRUFF KEY	AA100-11-319	1				
6	PLATE WASHER	AA100-11-706	1				
7	BALANCE WEIGHT	AA100-11-521	1				
8	OIL PUMP SPROCKET	AA100-11-641	1				
9	BALANCE SHAFT BUSHING FORMED NO.1	AA100-11-701	1				
	BALANCE SHAFT BUSHING FORMED NO.2	AA100-11-731	1				
10	BOLT	AA100-11-709	1				

1200 VALVE TRAIN SYSTEM

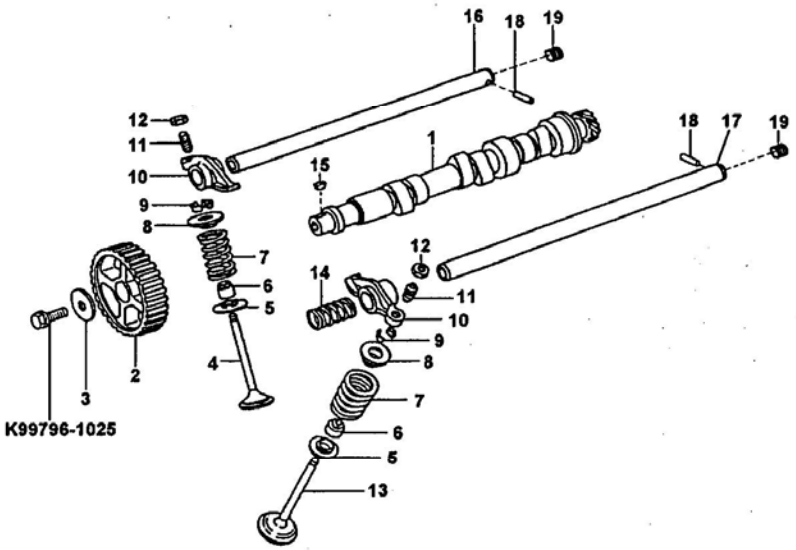

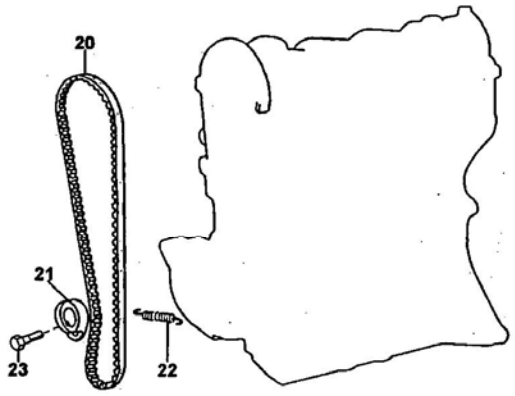

1200 VALVE TRAIN SYSTEM

NO	PARTS NAME	PARTS NUMBER	ALL	TRK	VAN	COH	NOTE
1	CAMSHAFT	AA100-12-421A	1				
		AA16A-12-421					LPG
2	CAMSHAFT TIMING BELT PULLEY	AA100-12-425	1				
3	PLATE WASHER	AA100-12-429	1				
4	INTAKE VALVE	AA100-12-111B	3				
5	VALVE SPRING SEAT	AA100-12-116A	6				
6	VALVE STEM SEAL	AA100-12-155	6				
7	VALVE SPRING	AA100-12-114	6				
8	VALVE SPRING RETAINER	AA100-12-112	6				
9	VALVE KEEPER	AA100-12-113	12				
10	VALVE ROCKER ARM	AA100-12-139	6				
11	VALVE ADJUSTING SCREW	AA100-12-141B	6				
12	HEX NUT	AA100-12-142	6				
13	EXHAUST VALVE	AA100-12-121A	3				
		(AA13A-12-121B)	3				
14	ROCKER SHAFT SPRING	AA100-12-166	6				
15	WOODRUFF KEY	D95161-10413	1				
16	ROCKER SHAFT NO.1	AA100-12-161	1				
17	ROCKER SHAFT NO.2	AA100-12-171A	1				
18	STRAIGHT PIN	AA100-12-3B4	2				
19	SCREW PLUG	AA100-12-3B2	2				
20	TIMING BELT	AA100-12-205B (243120Z000)	1				
21	TIMING BELT TENSIONER	AA100-12-700A	1				
22	TENSION SPRING	AA100-12-711	1				
23	BOLT & WASHER	AA100-12-4A4	1				

1300A INTAKE & EXHAUST MANIFOLD

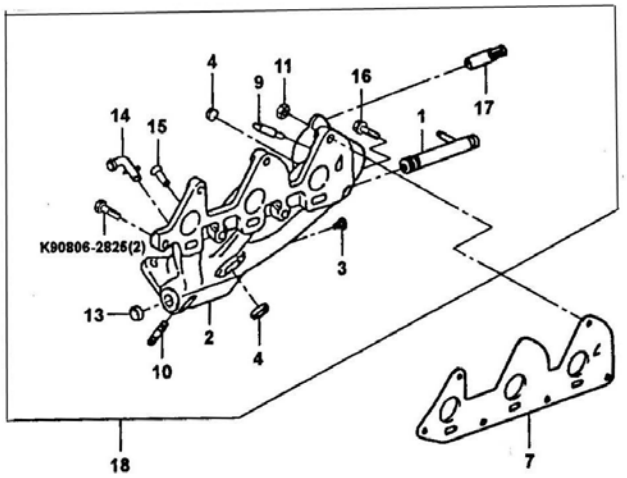

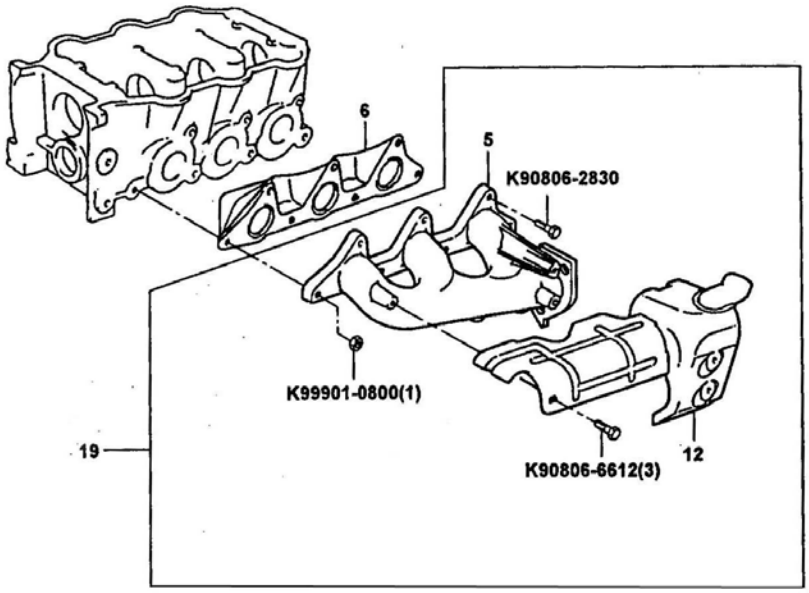

1300A INTAKE & EXHAUST MANIFOLD

NO	PARTS NAME	PARTS NUMBER	ALL	TRK	VAN	COH	NOTE
1	UNION	AA100-13-170A	1				
2	INTAKE MANIFOLD	AA100-13-101D	1				
3	TPER SCREW PLUG	AA100-13-6H2	1				
4	TIGHT PLUG	D96411-12500	1				
5	EXHAUSET MANIFOLD	AA100-13-451	1				
6	EXHAUST MANIFOLD TO HEAD GASKET	AA100-13-462	1				
7	INTAKE MANIFOLD TO HEAD GASKET	AA100-13-111C	1				
9	TUBE	AA100-13-5H8	1				
10	STUD BOLT	D92122-40832	1				
11	NUT	K99940-0800	4				
12	INSULATOR	AA100-13-390	1				
13	TIGHT PLUG	D96411-11400	1				
14	TUBE	AA100-13-5H4	2				
15	TUBE	AA100-13-5H6	1				
16	WASHER & BOLT	AA16A-13-6HA	1				
17	TAPER SCREW PLUG	AA100-10-3A4	3				ONLY LEADED E/G
18	INTAKE MANIFOLD ASM	AA100-13-100	1				
19	EXHAUST MANIFOLD ASM	AA100-13-450 (AA100-13-451)	1				

1300B INTAKE & EXHAUST MANIFOLD (LPG)

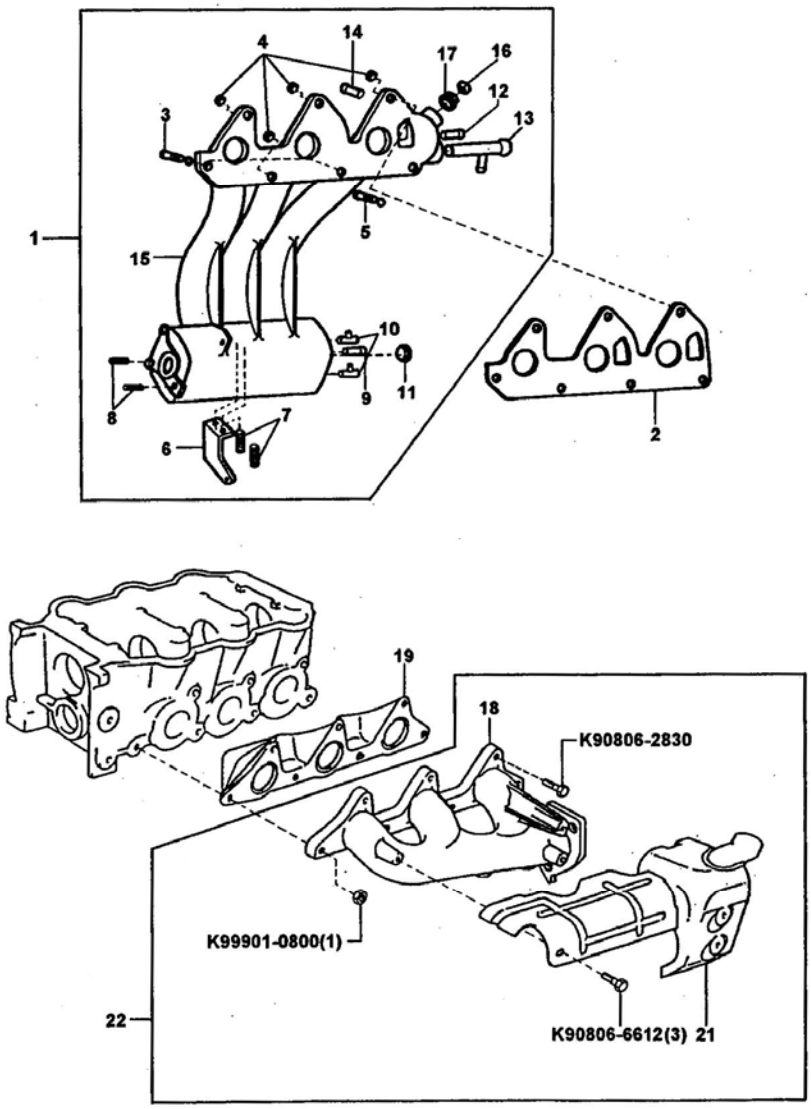

1300B INTAKE & EXHAUST MANIFOLD (LPG)

NO	PARTS NAME	PARTS NUMBER	ALL	TRK	VAN	COH	NOTE
1	INTAKE MANIFOLD ASM	AA16A-13-1000G	1				
2	INTAKE MANIFOLD TO HEAD GASKET	AA100-13-111C	1				
3	BOLT & WASHER	K90806-2825	2				
4	NUT	K99940-0800	4				
5	BOLT & WASHER	AA16A-13-6H4	1				
6	ACCELERATOR BRACKET	AA16A-13-665	1				
7	BOLT	K90806-6612	2				
8	STUD BOLT	K99851-0822A	2				
9	PIPE	K8574-13-133	1				
10	HOSE CONNECTOR	ON326-13-170A	2				
11	PLUG	K99306-2000	1				
12	WATER HOSE PIPE	OK99G-10-160	1				
13	WATER BY-PASS PIPE	AA16A-13-105A	1				
14	TUBE	AA100-13-5H8	1				
15	INTAKE MANIFOLD	AA16A-13-101F	1				
16	WATER TEMP SENSOR “E”	K8574-18-840	1				
17	GASKET	K99564-1200	1				
18	EXHAUST MANIFOLD	AA100-13-451	1				
19	EXHUAST MANIFLOD TO HEAD GASKET	AA100-13-462	1				
21	INSULATOR	AA100-13-390	1				
22	EXHAUST MANIFOLD	AA100-13-450	1				

1300B.1 INTAKE & EXHAUST MANIFOLD (MPI)

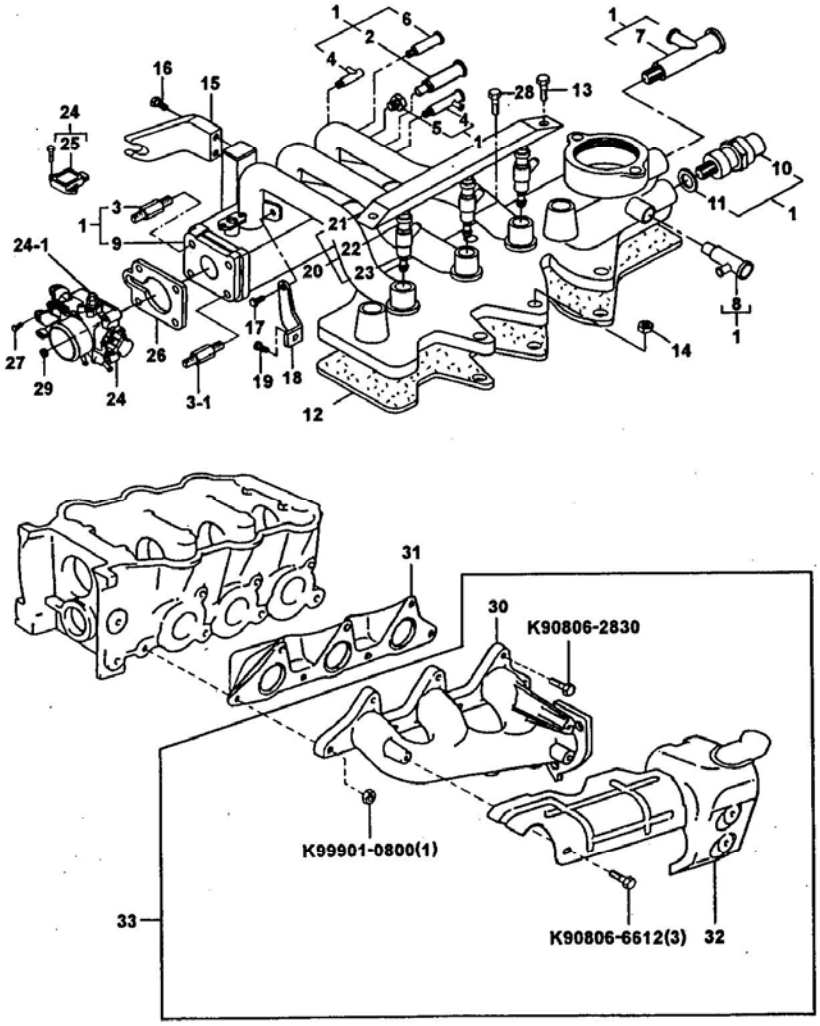

1300B.1 INTAKE & EXHAUST MANIFOLD (MPI)

NO	PARTS NAME	PARTS NUMBER	ALL	TRK	VAN	COH	NOTE
1	INTAKE MANIFOLD ASM	AW100-13-100B	1				
2	PIPE	K8574-13-133	1				
3	STUD	K99851-0832A	1				
4	HOSE CONNECTOR	ON326-13-170A	2				
5	PLUG	K99306-2000	1				
6	PIPE	M8086-13-103	1				
7	WATER HOSE PIPE	AW16A-13-105A	1				
8	WATER HOSE PIPE	AW100-13-5H8A	1				
9	INTAKE MANIFOLD	AW100-13-101A	1				
10	WATER TEMP SENSOR	K8574-18-840	1				
11	GASKET	K99564-1200	1				
12	INTAKE GASKET	AA100-13-111C	1				
13	BOLT & WAHSER	K90806-2825	3				
14	NUT	K99940-0800	4				
15	ACCELRATOR BRACKET	AA16A-13-665	1				
16	BOLT	K90806-6612	2				
17	FLANGE BOLT	K99794-0816	1				
18	INTAKE MANIFOLD STAY	AA16A-13-121A	1				
19	BOLT & WAHSER	D91611-41014	1				
20	FUEL RAIL ASM	GW100-13-25XA	1				
21	FUEL RAIL	GW100-13-251A	1				
22	CLIP	GW100-13-252	3				
23	FUEL INJECTOR	GW100-13-250	3				
24	THROTTLE BODY ASM	AW100-13-640A	1				
25	THROTTLE POSTION SENSOR	OK247-18-911	1				
26	THROTTLE BODY GASKET	AW100-13-655	1				
27	FLANGE BOLT	K99796-0825	2				

1300B.1 INTAKE & EXHAUST MANIFOLD (MPI)

NO	PARTS NAME	PARTS NUMBER	ALL	TRK	VAN	COH	NOTE
28	FLANGE BOLT	K99796-0612	2				
29	NUT	K99940-0800	2				
30	EXHAUST MANIFOLD	AA100-13-451	1				
31	EXHAUST MANIFOLD TO HEAD GASKET	AA100-13-462	1				
32	INSULATOR	AA13A-13-390	1				
33	EXHAUST MANIFOLD ASM	AA100-13-450	1				
3-1	STUD	K99851-0840A	1				
24-1	IDLE SPEED VALVE	EW100-13-X31	1				

1300C AIR CLEANER (GASOLINE: TRUCK)

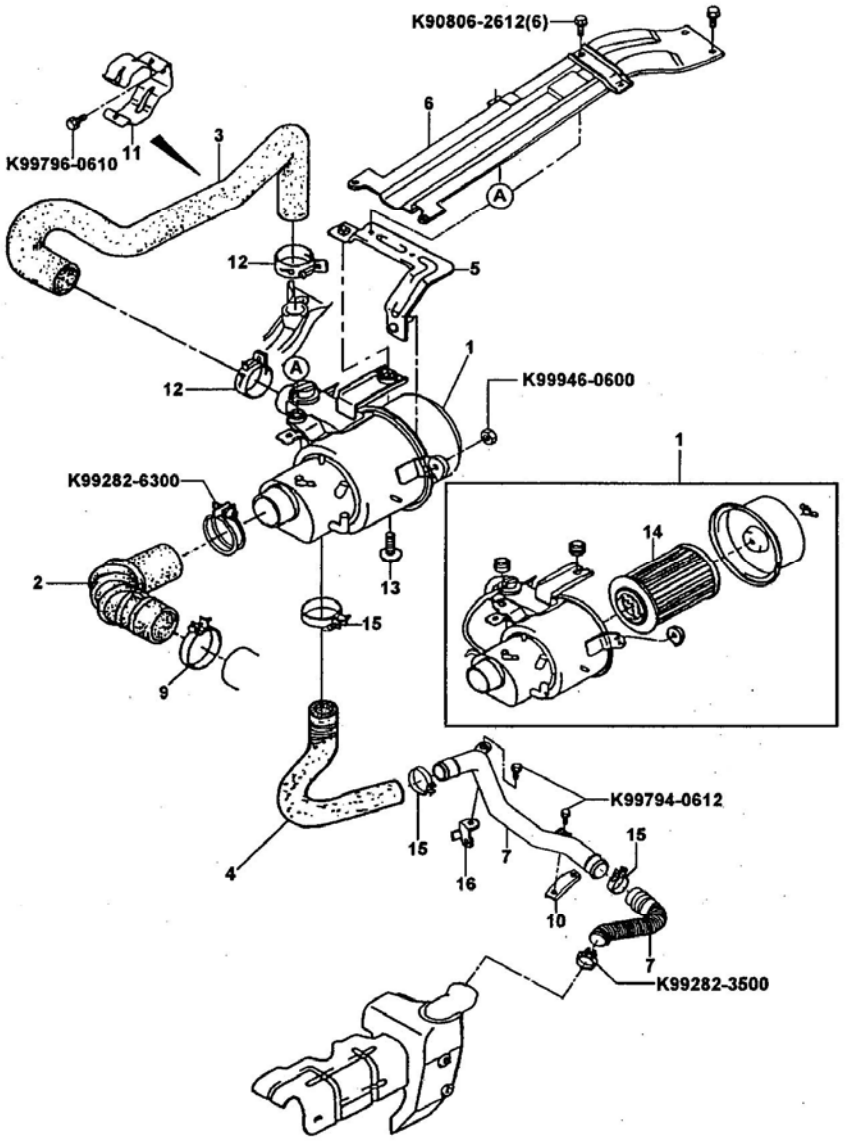

1300C AIR CLEANER (GASOLINE: TRUCK)

NO	PARTS NAME	PARTS NUMBER	ALL	TRK	VAN	COH	NOTE
1	AIR CLEANER ASM	AA100-13-320B		1			EXPORT: OPT
		AAW110-13-320		1			EXPORT: STD
2	AIR HOSE	AA100-13-345		1			
3	AIR INTAKE HOSE	AA100-13-331A		1			
4	HOT AIR NO.2 HOSE	AA100-13-343		1			EXPORT: OPT
5	AIR CLEANER BRACKET	AA100-13-310		1			
6	AIR CLEANER BRACKET	AA100-13-411A		1			
7	HOT AIR NO.1 HOSE	AA110-13-344B		1			EXPORT: OPT
8	HOT AIR INTAKE PIPE	AA110-13-330B		1			EXPORT: OPT
9	HOSE CLAMP	AA100-13-336		1			
10	BRACKET	AA110-13-342A		1			
11	HOSE CLAMP	AA100-13-737A		1			
12	HOSE CLAMP	AA100-13-339		2			
13	BOLT	AA100-13-362		2			
14	AIR FILTER	AA100-23-603A		1			
15	HOSE CLAMP	K9928-3700		3			EXPORT: OPT
16	AIR PIPE BRACKET	AA110-13-341		1			

1300D AIR CLEANER (LPG: TRUCK)

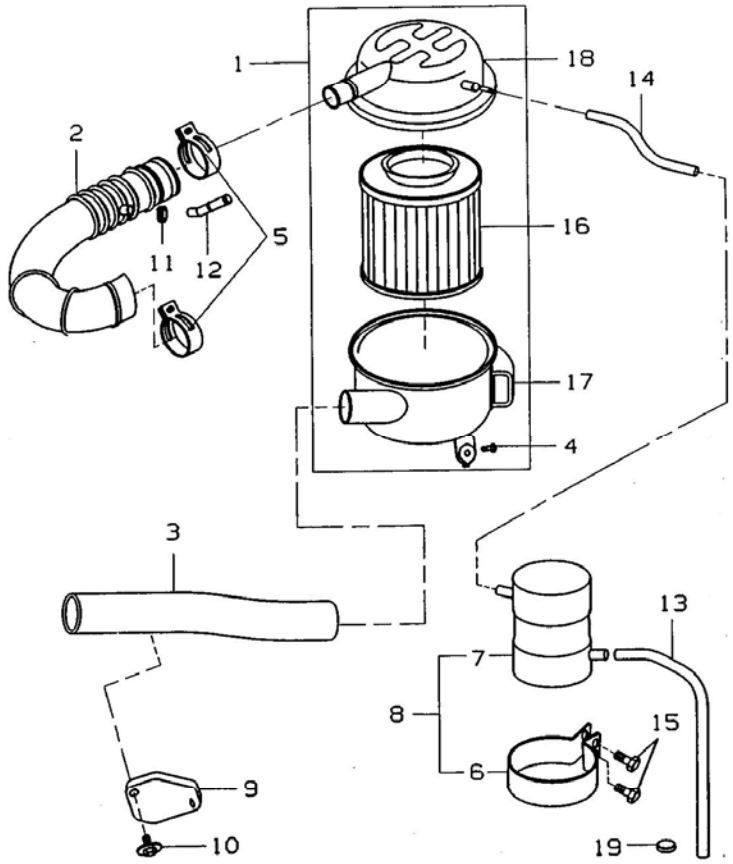

1300D AIR CLEANER (LPG: TRUCK)

NO	PARTS NAME	PARTS NUMBER	ALL	TRK	VAN	COH	NOTE
1	AIR CLEANER ASM	AA16A-13-320A		1			
2	AIR HOSE	AA16A-13-345A		1			
3	AIR INTAKE HOSE	AA16A-13-331		1			
4	BOLT	OR205-13-362		2			
5	HOSE CLAMP	OK054-13-736		2			
6	CLAMP	AA16A-13-372		1			
7	SURGE TANK	AA16A-13-371		1			
8	SURGE TANK ASM	AA16A-13-370B		1			
9	PROTECTOR	AA16A-13-841		1			
10	BOLT & WASHER	AA100-56-893		1			
11	CLIP	K99283-1600		1			
12	VENTILATION TUBE	AA16A-13-746		1			
13	HOSE	AA16A-13-973C		1			
14	HOSE	AA16A-13-975B		1			
15	FLANGE BOLT	K99796-0612		3			
16	AIR FILTER	AA16A-13-603A		1			
17	CASE	AA16A-13-Z02		1			
18	COVER	AA16A-13-Z01		1			
19	BAND CLAMP	K99709-3200		1			

1300D.1 AIR CLEANER (MPI: TRUCK)

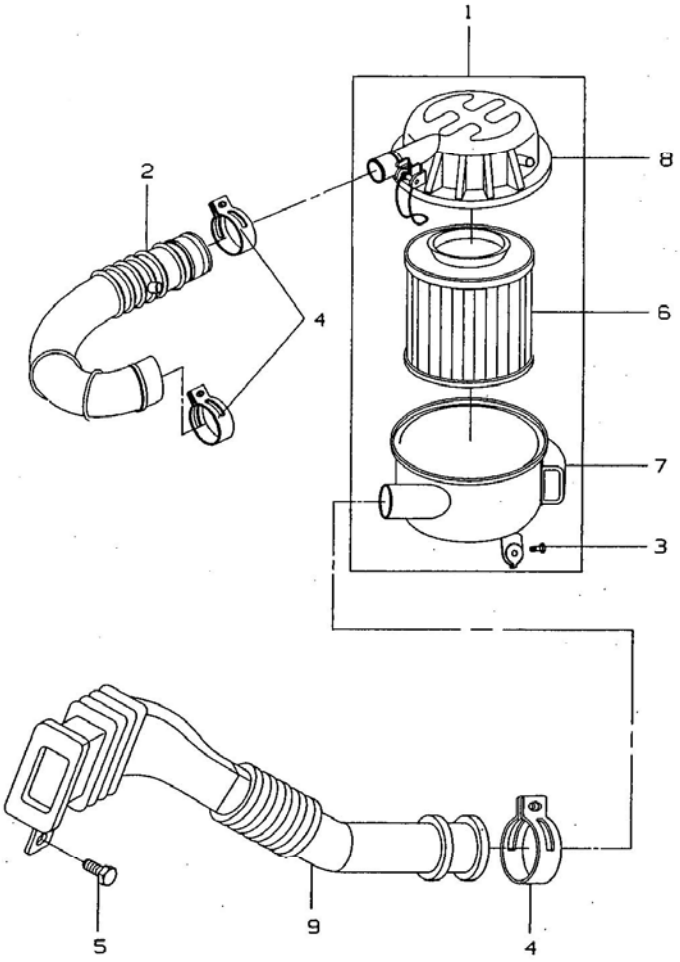

1300D.1 AIR CLEANER (MPI: TRUCK)

NO	PARTS NAME	PARTS NUMBER	ALL	TRK	VAN	COH	NOTE
1	AIR CLEANER ASM	AW100-13-320		1			
2	AIR HOSE	AA16A-13-345A		1			
3	BOLT	OR205-13-362		2			
4	HOSE CLAMP	OK054-13-736		3			
5	FLANGE BOLT	K99796-0616		1			
6	AIR FILTER	AA16A-23-603A		1			
7	CASE	AA16A-13-Z02		1			
8	COVER	AA16A-13-Z01		1			
9	AIR INTAKE PIPE	AW100-13-330A		1			

1300E AIR CLEANER (VAN - COACH)

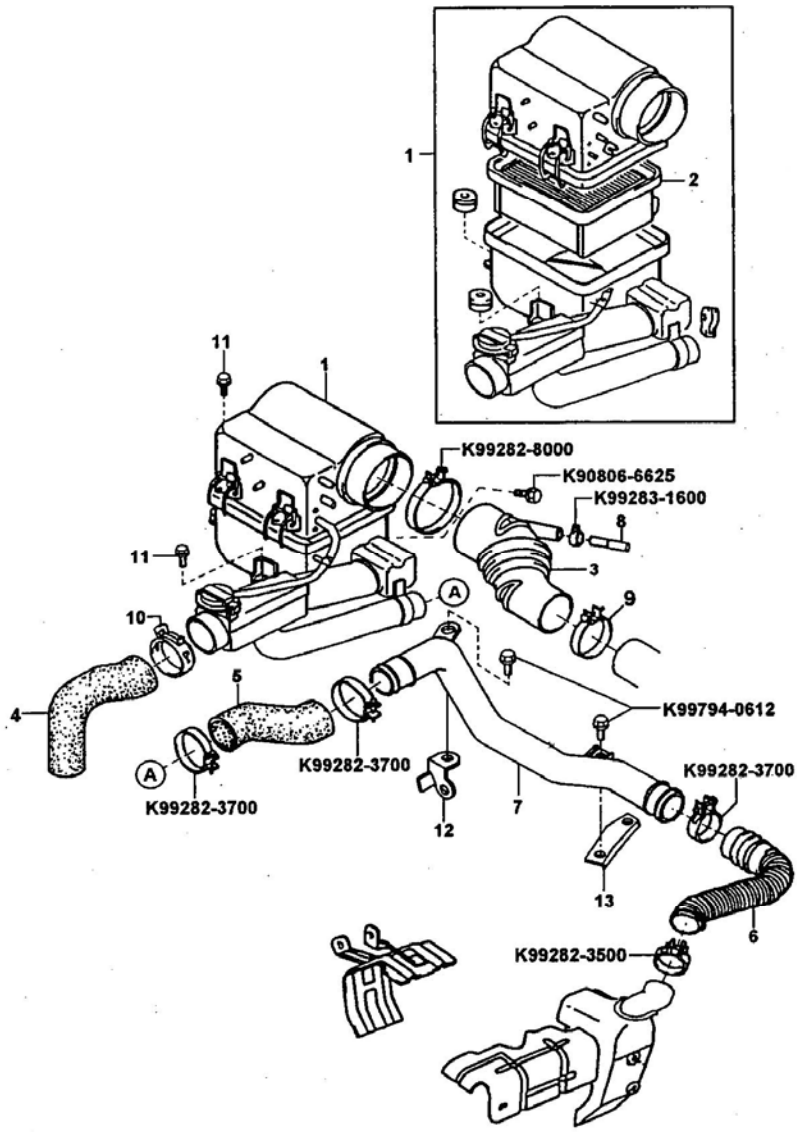

1300E AIR CLEANER (VAN - COACH)

NO	PARTS NAME	PARTS NUMBER	ALL	TRK	VAN	COH	NOTE
1	AIR CLEANER AMS	AA110-13-320B			1	1	EXPORT: OPT
		AAW00-13-320			1	1	EXPORT: STD
3	AIR INLET HOSE	AA110-13-345A			1	1	
2	AIR FILTER	AA110-23-603A			1	1	
4	AIR INTAKE HOSE	AA110-13-331A			1	1	
		AAW10-13-331			1	1	EXPORT
5	HOT AIR HOSE NO.2	AA110-13-343B			1		EXPORT: OPT
6	HOT AIR HOSE NO.1	AA110-13-344B			1	1	
7	HOT AIR INTAKE PIPE	AA110-13-330B			1	1	
8	VENTILATION TUBE	AA110-13-746			1	1	
9	HOSE CLAP	AA100-13-336			1	1	EXPORT: OPT
10	HOSE CLIP	AA100-13-339			1	1	
11	BOLT	AA100-13-362			2	2	
12	AIR PIPE BRACKET	AA110-13-341			1	1	
13	AIR PIPE BRACKET	AA110-13-342A			1	1	

1300F AIR CLEANER (LPG: VAN - COACH)

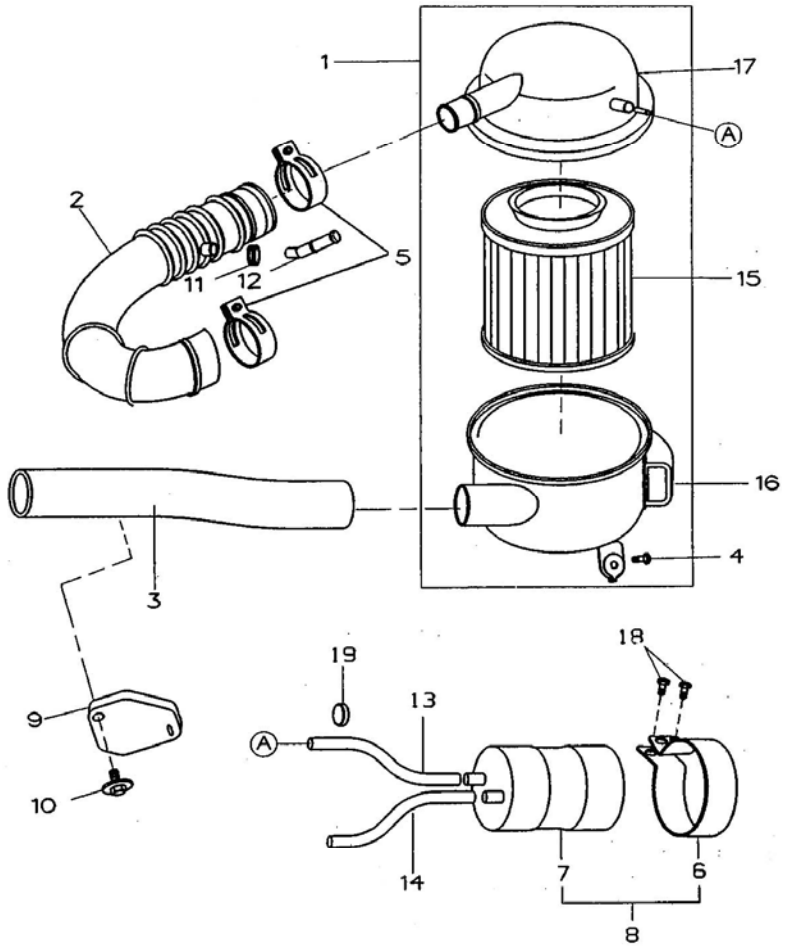

1300F AIR CLEANER (LPG: VAN - COACH)

NO	PARTS NAME	PARTS NUMBER	ALL	TRK	VAN	COH	NOTE
1	AIR CLEANER ASM	AA161-13-320A			1	1	
2	AIR HOSE	AA161-13-345			1	1	
3	AIR INTAKE HOSE	AA16A-13-331A			1	1	
4	BOLT	OR205-13-362			2	2	
5	HOSE CLAMP	OK054-13-736			2	2	
6	CLAMP	AA161-13-372			1	1	
7	SURGE TANK	AA161-13-371			1	1	
8	SURGE TANK ASM	AA161-13-370B			1	1	
9	PROTECTOR	AA161-13-841			1	1	
10	BOLT & WASHER	AA100-56-893			1	1	
11	CLIP	K99283-1600			1	1	
12	VENTILATION TUBE	AA16A-13-746			1	1	
13	HOSE	AA161-13-973A			1	1	
14	HOSE	AA161-13-975B			1	1	
15	AIR FILTER	AA16A-23-603A			1	1	
16	CASE	AA16A-13-Z02			1	1	
17	COVER	AA16A-13-Z01			1	1	
18	FLANGE BOLT	K99796-0612			3	3	
19	BAND CLAMP	K99709-3200			2	2	

1300F.1 AIR CLEANER (MPI: VAN - COACH)

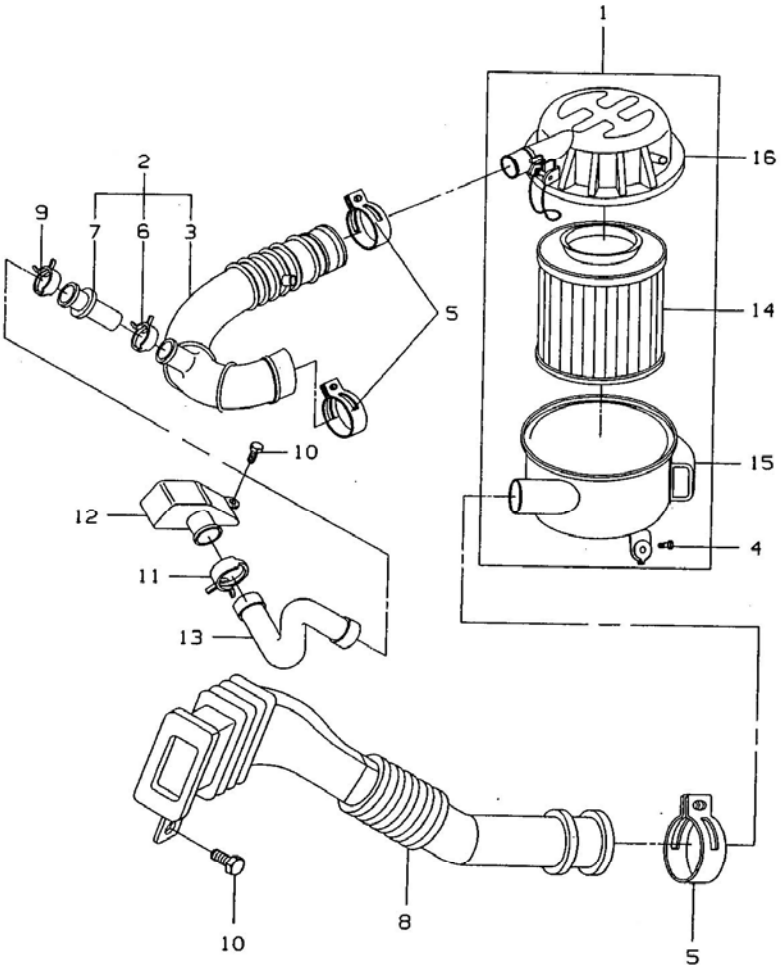

1300F.1 AIR CLEANER (MPI: VAN - COACH)

NO	PARTS NAME	PARTS NUMBER	ALL	TRK	VAN	COH	NOTE
1	AIR CLEANER ASM	AW111-13-320			1	1	
2	AIR HOSE	AW111-13-345A			1	1	
3	HOSE	AW111-13-346			1	1	
4	BOLT	OR205-13-362			2	2	
5	HOSE CLAMP	OK054-13-736			3	3	
6	CLIP	KPWNCB-3100			1	1	
7	HOSE CONNECTOR	AW111-13-348			1	1	
8	AIR INTAKE PIPE	AW100-13-330A			1	1	
9	HOSE CLIP	KPWNCB-31			1	1	
10	FLANGE BOLT	K99796-0616			3	3	
11	HOSE CLIP	KPWNCB-3400			1	1	
12	RESONANCE CHAMBER	AW111-13-351			1	1	
13	RESONATOR HOSE	AW111-13-347A			1	1	
14	AIR FILTER	AA16A-23-603A			1	1	
15	CASE	AA16A-13-Z02			1	1	
16	COVER	AA16A-13-Z01			1	1	

1300G VENTILATION HOSE

TRUCK

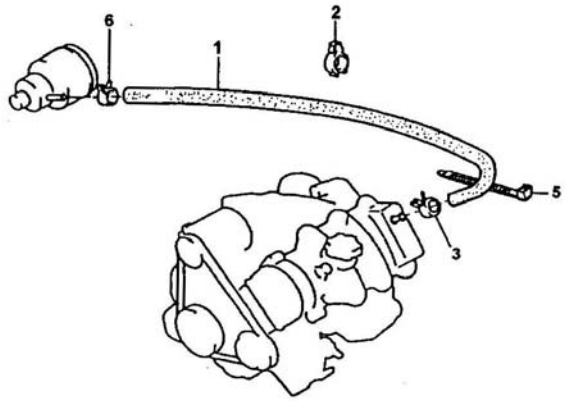

VAN &COACH

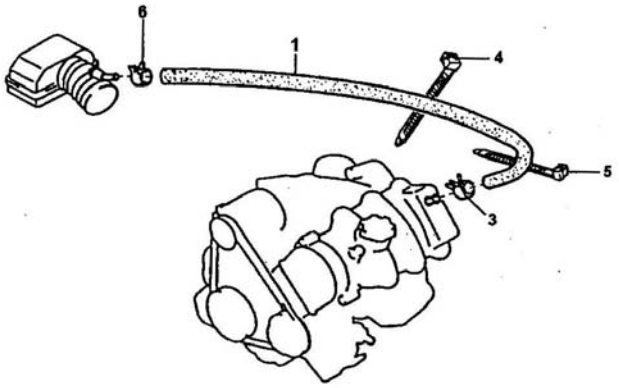

1300G VENTILATION HOSE

NO	PARTS NAME	PARTS NUMBER	ALL	TRK	VAN	COH	NOTE
1	VENTILATION HOSE	AA161-13-741B			1	1	
		AA16A-13-741		1			
2	CLAMPE	AA100-13-2K1		1			
3	CLIP	AA100-13-4K3	1				
4	CLAMP	K99709-3250			1	1	
5	CLAMP	AA100-13-3K2	1				
6	CLIP	AA100-13-744	1				

1300H INTAKE & EXHAUSE SYSTEM (LPG: TRUCK)

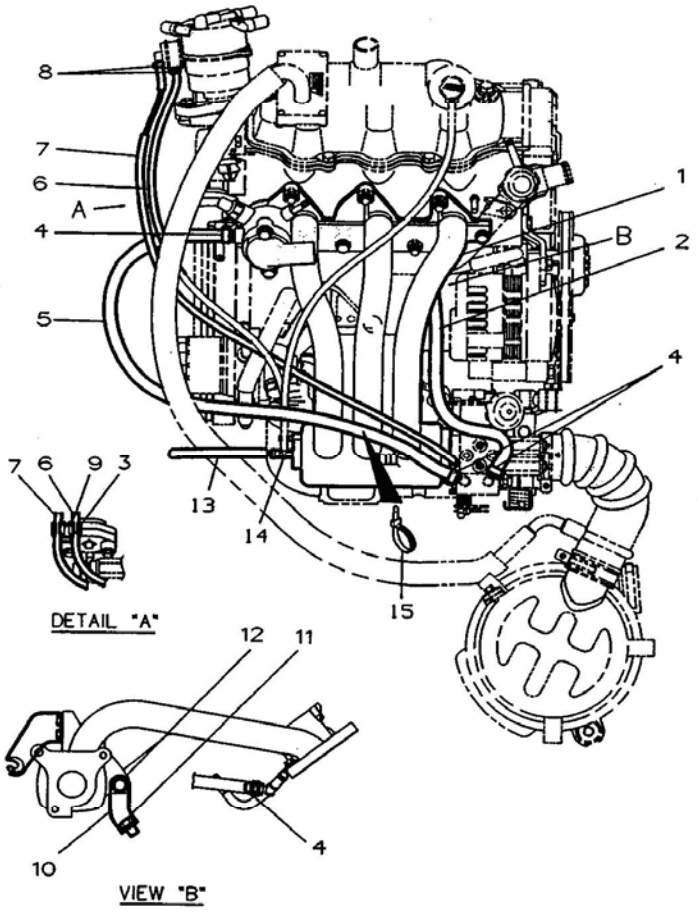

1300H INTAKE & EXHAUSE SYSTEM (LPG: TRUCK)

NO	PARTS NAME	PARTS NUMBER	ALL	TRK	VAN	COH	NOTE
1	INTAKE MANIFOLD EQUIP	AA16A-13-005		1			
2	WATER HOSE	AA16A-13-528B		1			
3	CLAMP	AA100-13-BD4A		1			
4	HOSE CLIP	K99283-1300		4			
5	WATER HOSE	AA16A-13-527B		1			
6	VACUUM HOSE	AA16A-13-977A		1			
7	VACUUM HOSE	AA16A-13-BD2B		1			
8	CLIP	K99283-0600		2			
9	CLAMP	AA100-13-BD3		1			
10	INTAKE MANIFOLD STAY	AA16A-13-121		1			
11	BOLT	D91611-41014		1			
12	FLANGE BOLT	K99794-0816		1			
13	VACUUM HOSE	AA16A-43-842		1			
14	HOSE CLIP	K99283-1500		1			

1300I INTAKE & EXHAUSE SYSTEM (LPG: VAN-COACH)

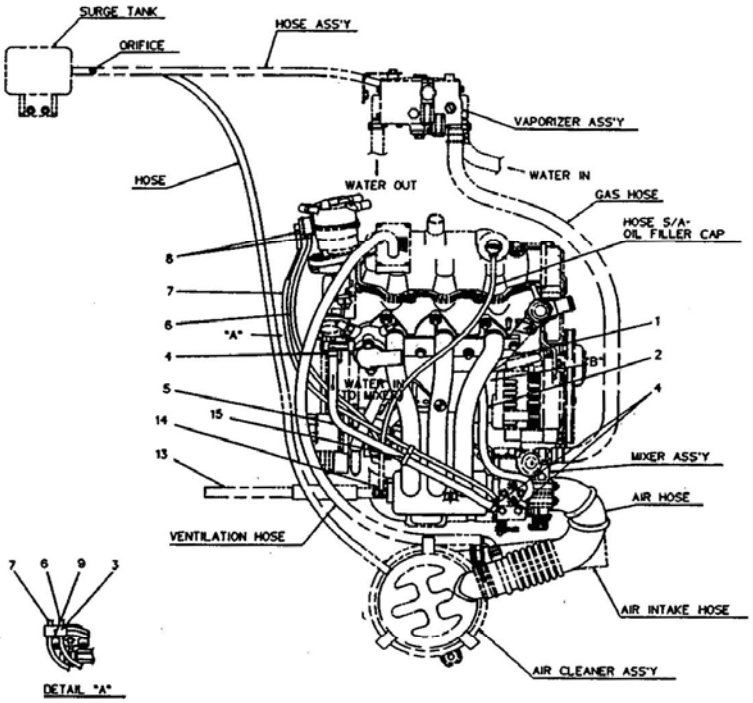

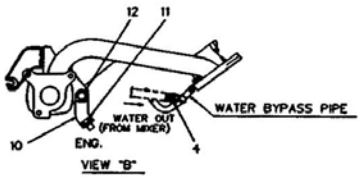

1300I INTAKE & EXHAUSE SYSTEM (LPG: VAN-COACH)

NO	PARTS NAME	PARTS NUMBER	ALL	TRK	VAN	COH	NOTE
1	INTAKE MANIFOLD EQUIP	AA16A-13-005			1	1	
2	WATER HOSE	AA16A-13-528B			1	1	
3	CLAMP	AA100-13-BD4A			1	1	
4	HOSE CLIP	K99283-1300			4	4	
5	WATER HOSE	AA16A-13-527B			1	1	
6	VACUUM HOSE	AA16A-13-977A			1	1	
7	VACUUM HOSE	AA16A-13-BD2B			1	1	
8	CLIP	K99283-0600			2	2	
9	CLAMP	AA100-13-BD3			1	1	
10	INTAKE MANIFOLD STAY	AA16A-13-121			1	1	
11	BOLT & WASHER	K99794-0816			1	1	
12	FLANGE BOLT	K99794-0816			1	1	
13	VACUUM HOSE	AA161-43-842			1	1	
14	CLIP	K99283-1500			1	1	
15	CLAMP	AA100-13-2E1			1	1	

1300J EMISSION CONTOL SYSTEM (TRUCK)

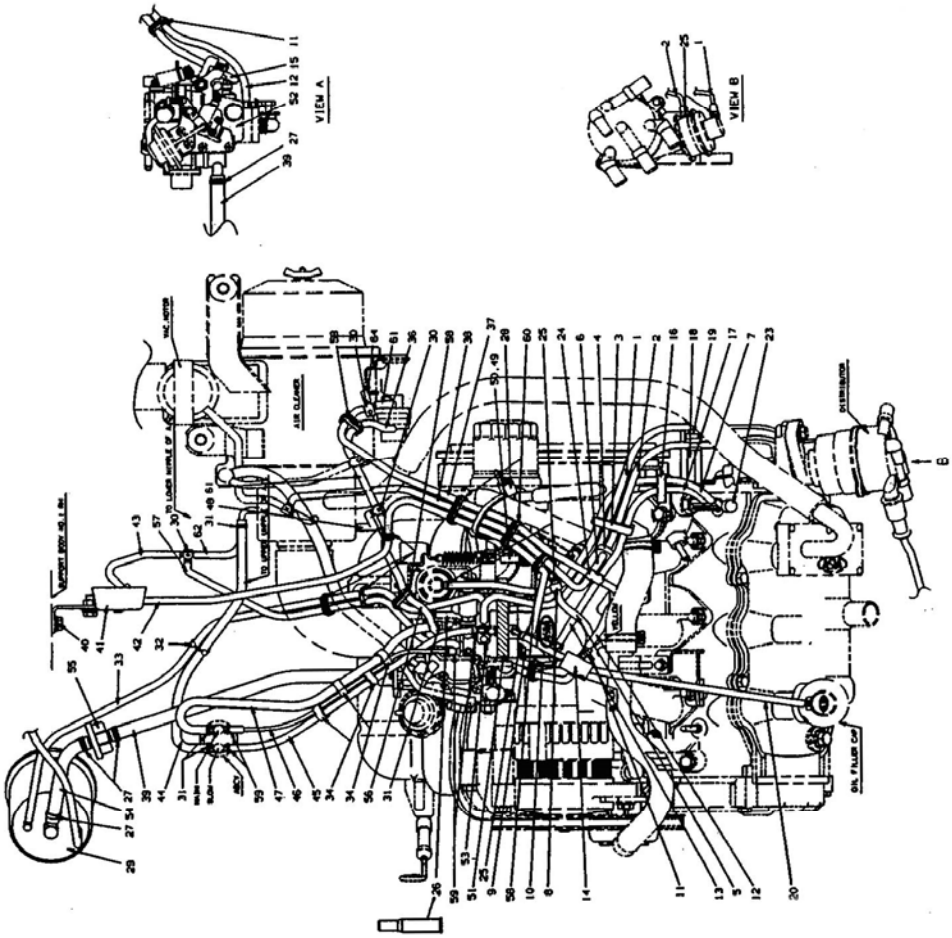

1300J EMISSION CONTOL SYSTEM (TRUCK)

NO	PARTS NAME	PARTS NUMBER	ALL	TRK	VAN	COH	NOTE
1	HOSE	AA100-13-BD2		1			
2	HOSE	AA100-13-BD1		1			
3	CLAMP	AA100-132-XA5		1			
4	AIR FILTER ASM	AA100-13-988A		1			
5	VACUMM HOSE	D95411-19906		1			
6	VACUUM HOSE	D95411-19904		1			
7	VACUUM HOSE	AA100-13-XA2		1			
8	CLAMP	AA100-13-3C3		1			
9	BOLT & WASHER	K90806-2835		1			
10	CLIP	K99276-1608		1			
11	CLAMP	KKY01-18-291		2			
12	HOSE	AA100-13-3C4		1			
13	VACUUM HOSE	D95411-19910		1			
14	VACUUM TRANSMIT VALVE	AA100-13-3C1A		1			
15	HOSE	AA110-13-3C2		1			
16	CLAMP	AA100-13-XA3		1			
17	VACCUM HOSE	D95411-19923		1			
18	CLAMP	AA100-13-BD4B		1			
19	CLAMP	AA100-13-BD3		1			
20	HOSE OIL FILLER	AA100-13-743		1			
23	VACUUM SWITCH BIMETAL VALVE	AA100-13-XA1A		1			
24	6-WAY	AA100-13-BD5		1			
25	CLIP	K99283-0600		5			
26	LOCK NUTE	AA100-13-X50		1			
27	CLIP	K99283-1300		4			
28	BAND	K99709-3250		1			
29	CANISTER	AA100-13-970A		1			
30	3-WAY	AA100-13-ZK1		4			
31	CLIP	K850-13-855		4			
32	CLAMP	AA100-13-9A2		1			
33	VACUUM HOSE	D95411-19965		1			
34	CLAMP	AA100-13-XJM		4			
36	VACUUM HOSE	D95411-19912		1			
37	VACUUM HOSE	D95411-19939		1			
38	VACCUM HOSE	D95411-19945		1			
		KK150-13-104					EXPORT
39	HOSE	AA100-13-9A1A		1			
40	BOLT & WASHER	K90806-2612		2			

1300J EMISSION CONTOL SYSTEM (TRUCK)

NO	PARTS NAME	PARTS NUMBER	ALL	TRK	VAN	COH	NOTE
41	THERMO VALVE SUB ASM	AA100-13-ZKX		1			
42	VACUUM HOSE	D95411-19951		1			
43	VACUUM HOSE	D95411-19910		1			
44	HOSE	AA100-13-XJC		1			
45	VACUUM HOSE	AA100-13-XJG		1			
46	VACUUM HOSE	D95413-4993		1			
47	HOSE	AA100-13-XJB		1			
48	VACUUM HOSE	D95411-19908		1			
49	POSITIONER	AA100-18-91X		1			
50	BOLT & WASHER	K90806-6614		2			
51	INSULATOR	AA100-13-315		1			
		AA100-13-315-J12		1			BRAZIL ONLY
52	CARBURETOR	AA100-13-600		1			
		DAW00-13-600-J12		1			BRAZIL ONLY
53	PLUG	KK150-13-104		8			
54	HOSE	AA100-13-9A8		1			
55	THERMO BIMETAL	AA100-13-422		1			
56	VACUUM HOSE	D95411-19918		1			
57	VACUUM HOSE	D95411-19942		1			
58	CLAMP	JJY01-18-291		6			
				5			EXPORT
59	CLIP	K99283-0900		4			
60	CLAMP	AA110-13-447		2			
61	VACUUM HOSE	D95411-19904		2			
62	VACUUM HOSE	D95411-19906		1			
64	PLUG	KK150-13-104		1			

1300K EMISSION CONTOL SYSTEM (TRUCK- ONLY LEADED E/G)

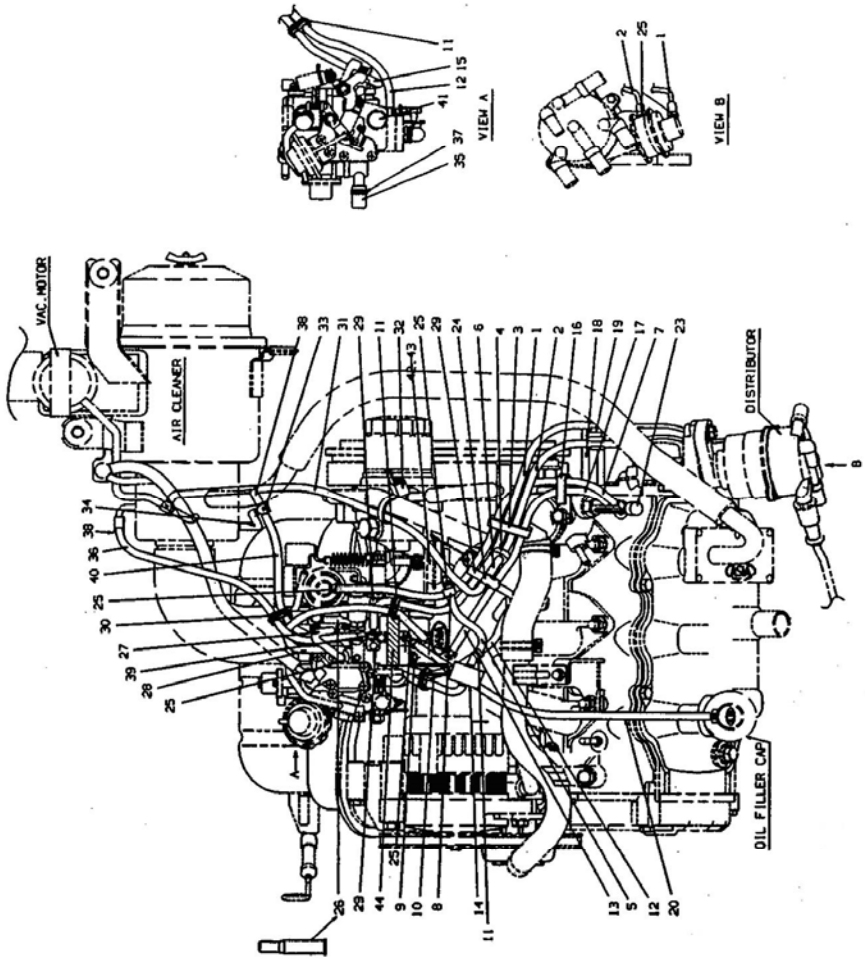

1300K EMISSION CONTOL SYSTEM (TRUCK- ONLY LEADED E/G)

NO	PARTS NAME	PARTS NUMBER	ALL	TRK	VAN	COH	NOTE
1	HOSE	AA100-13-BD2		1			
2	HOSE	AA100-13-BD1		1			
3	CLAMP	AA100-13-XA5		1			
4	AIR FILTER ASM	AA100-13-988A		1			
5	VACUUM HOSE	D95411-19906		1			
6	VACUUM HOSE	D95411-19904		1			
7	VACUUM HOSE	AA100-13-XA2		1			
8	CLAMP	AA100-13-3C3		1			
9	BOLT & WASHER	K90806-2835		1			
10	CLIP	K99276-1608		1			
11	CLAMP	KKY01-18-291		3			
12	HOSE	AA100-13-3C4		1			
13	VACCUM HOSE	D95411-19910		1			
14	VACUUM TRANSMIT VALVE	AA100-13-3C1A		1			
15	HOSE	AA110-13-3C2		1			
16	CLAMP	AA100-13-XA3		1			
17	VACUUM HOSE	D95411-19923		1			
18	CLAMP	AA100-13-BD4B		1			
19	CLAMP	AA100-13-BD3		1			
20	OIL FILLER HOSE	AA100-13-743		1			
23	VALVE	AA100-13-XA1A		1			
24	6-WAY	AA100-13-BD5		1			
25	CLIP	K99283-0600		5			
26	LOCK NUT	AA100-13-X50		1			
27	HOSE	AA100-13-624-PO1		1			
28	VACUUM HOSE	AA110-42-961B		1			
29	PLUG	KK150-13-104		4			
30	CLAMP	KKY01-18-291		1			
31	VACUUM HOSE	D95411-19945		1			
		KK150-13-104		1			EXPORT
32	BAND	K99709-3250		1			
33	3-WAY	AA100-13-ZK1		4			
34	VACUUM HOSE	D95411-19908		1			
35	PLUG	AA100-13-635-PO1		1			
36	HOSE	AA100-13-625-PO1		1			

1300K EMISSION CONTOL SYSTEM (TRUCK- ONLY LEADED E/G)

NO	PARTS NAME	PARTS NUMBER	ALL	TRK	VAN	COH	NOTE
37	CLIP	K99283-0600		1			
38	PLUG	KK150-13-104		2			
39	CLIP	K99283-0600		1			
40	VACUUM HOSE	AA100-42-961B		1			
41	CARBURETOR	AA100-13-600		1			
42	POSITIONER	AA100-18-91X		1			
43	BOLT & WASHER	K90806-6614		2			
44	INSULATOR	AA100-13-315		1			

1300L LPG FUEL SYSTEM (TRUCK)

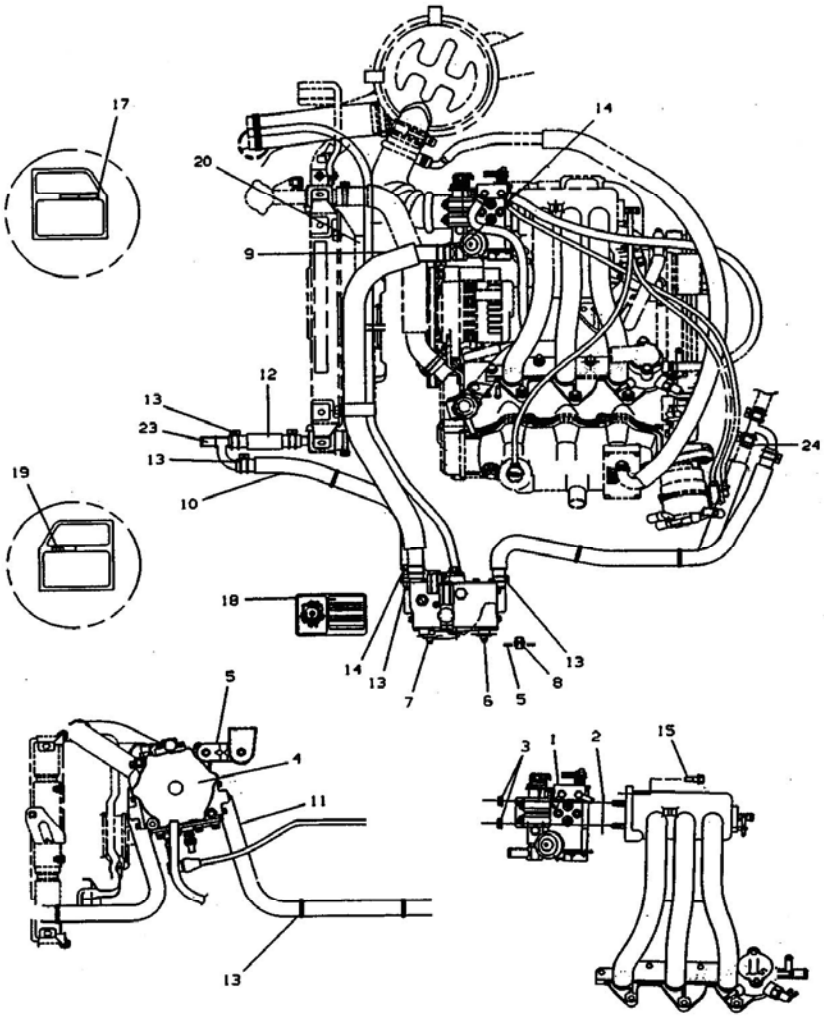

1300L LPG FUEL SYSTEM (TRUCK)

NO	PARTS NAME	PARTS NUMBER	ALL	TRK	VAN	COH	NOTE
1	LPG MIXER	AA16A-13-620D		1			
2	MIXER GASKET	AA16A-13-655A		1			
3	FLANGE NUT	AA100-13-6H6		2			
4	VAPORIZER	AA16A-13-950F		1			
5	VAPORIZER BRACKET	AA16A-13-940B		1			
6	FLANGE BOLT	K99796-0830		1			
7	FLANGE BOLT	K99784-0885		1			
8	FLANGE BOLT	K99796-0814		1			
9	GAS HOSE	AA16A-13-521C		1			
10	WATER HOSE	AA16A-13-524C		1			
11	WATER HOSE	AA16A-13-521C		1			
12	WATER HOSE	AA16A-13-526		1			
13	HOSE CLAMP	K99282-2200		6			
14	HOSE CLAMP	K99282-2600		2			
15	BOLT & WASHER	K90784-0820		1			
16	CLIP	AA16A-13-424		1			
17	CAUTION LABEL	AA16A-13-959A		1			
18	VAPORIZER LABEL	AA16A-13-958D		1			
19	FUEL LABEL	AA13A-13-957B		1			
20	PROTECTOR	AA16A-15-026		1			
23	TEE-JOINT	AA113-61-345		2			
24	CLIP	AA100-61-215		1			

1300M EMISSION CONTROL SYSTEM (VAN-COACH)

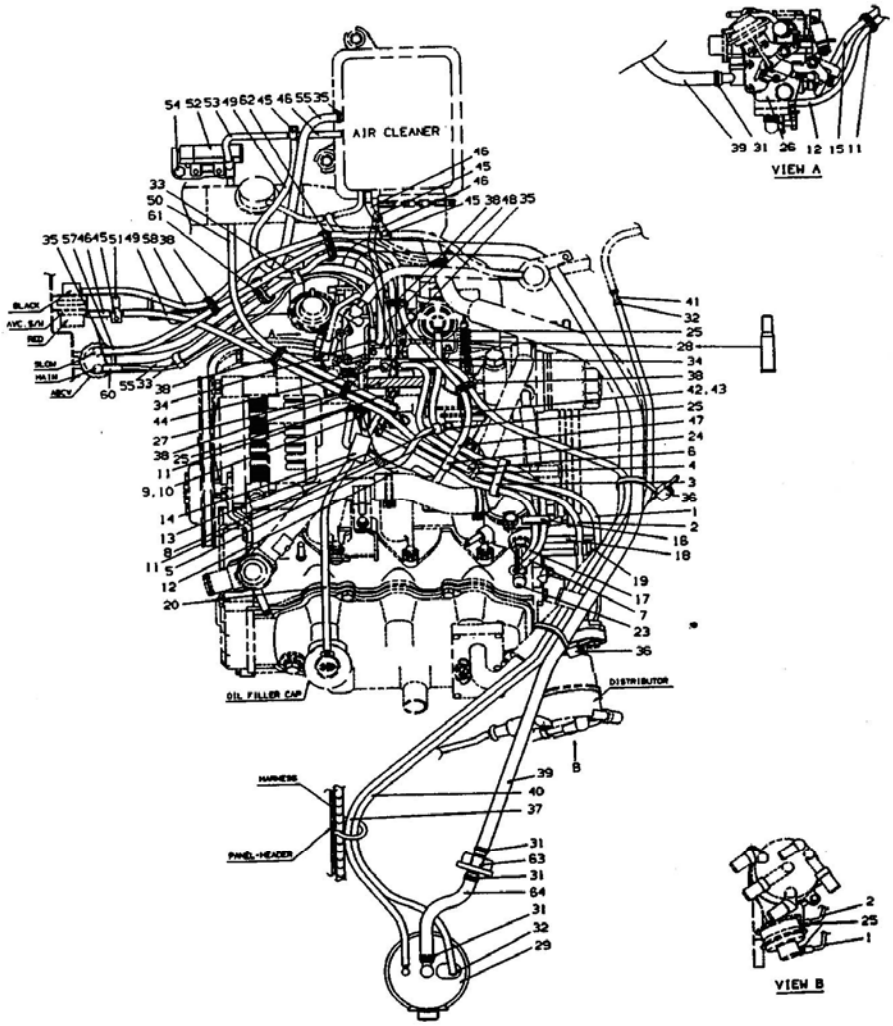

1300M EMISSION CONTROL SYSTEM (VAN-COACH)

NO	PARTS NAME	PARTS NUMBER	ALL	TRK	VAN	COH	NOTE
1	HOSE	AA100-13-BD2			1	1	
2	HOSE	AA100-13-BD1			1	1	
3	CLAMP	AA100-13-XA5			1	1	
4	AIR FILTER ASM	AA100-13-988A			1	1	
5	VACUUM HOSE	D95411-19906			1	1	
6	VACUUM HOSE	D95411-19904			1	1	
7	VACUUM HOSE	AA100-13-XA2			1	1	
8	CLAMP	AA100-13-3C3			1	1	
9	BOLT & WASHER	K90806-2835			1	1	
10	CLIP	K99276-1608			1	1	
11	CLAMP	KKY01-18-291			2	2	
12	HOSE	AA100-13-3C4			1	1	
13	VACUUM HOSE	D95411-19910			1	1	
14	VACUUM TRANSMIT VALVE	AA100-13-3C1A			1	1	
15	HOSE	AA110-13-3C2			1	1	
16	CLAMP	AA100-13-XA3			1	1	
17	VACUUM HOSE	D95411-19923			1	1	
18	CLAMP	AA100-13-BD48			1	1	
19	CLAMP	AA100-13-BD3			1	1	
20	OIL FILTER HOSE	AA100-13-743			1	1	
23	VACUUM SWITCH BIMETAL VALVE	AA100-13-XA1A			1	1	
24	6-WAY	AA100-13-BD5			1	1	
25	CLIP	K99283-0600			5	5	
26	CARBURETOR	AA100-13-600			1	1	
		DAW00-13-600-J12			1	1	BRAZIL: ONLY
27	INSULATOR	AA100-13-315			1	1	
		AA100-13-315-J12			1	1	BRAZIL: ONLY
28	LOCK NUT	AA100-13-X50			1	1	
29	CANISTER	AA100-13-970A			1	1	
31	HOSE CLIP	K99283-1300			4	4	
32	CLIP	K99283-0800			2	2	
33	CLAMP	AA100-13-XJM			1	1	
34	CLIP	K99283-0600			2	2	
35	CLIP	K850-13-855			4	4	
36	CLAMP	AA110-13-9A5			2	2	

1300M EMISSION CONTROL SYSTEM (VAN-COACH)

NO	PARTS NAME	PARTS NUMBER	ALL	TRK	VAN	COH	NOTE
37	HOSE	AA110-13-972A			1	1	
38	CLAMP	KKY01-18-291			5	5	
					3	3	EXPORT
39	HOSE	AA110-13-973C			1	1	
40	HOSE	AA110-13-971			1	1	
41	2-WAY	AA110-13-971			1	1	
42	POSITIONER	AA100-18-91X			1	1	
43	BOLT & WASHER	K90806-6614			1	1	
44	PLUG	KK150-13-104			8	8	
45	3-WAY	AA100-13-ZK1			4	4	
46	VACUUM HOSE	D95411-19904			4	4	
47	VACUUM HOSE	D95411-19928			1	1	
		KK150-13-104			1	1	EXPORT
48	VACUUM HOSE	AA110-42-961B			1	1	
49	VACUUM HOSE	D95411-19936			2	2	
50	VACUUM HOSE	D95411-19945			1	1	
51	PLUG	KK150-13-104			1	1	
52	THERMO VALVE SUB ASM	AA110-13-ZK0			1	1	
53	VACUUM VALVE	D95411-19910			1	1	
54	BOLT & WASHER	K90806-2612			1	1	
55	HOSE	AA110-13-XJB			1	1	
57	VACUUM HOSE	D95411-19941			1	1	
58	VACUUM HOSE	D95411-19930			1	1	
60	VACUUM TUBE	D95413-49939			1	1	
61	CLAMP	AA110-13-XJD			1	1	
62	CLAMP	AA100-13-447			1	1	
63	THERMO BIMETAL	AA100-13-422			1	1	
64	HOSE	AA110-13-975A			1	1	

1300M.1 EMISSION CONTROL SYSTEM (MPI: TRUCK)

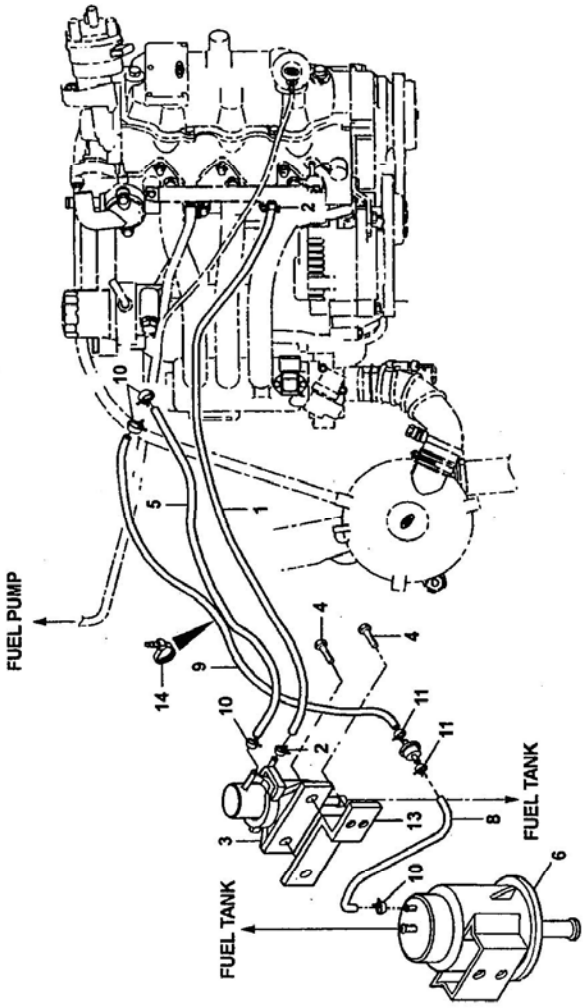

1300M.1 EMISSION CONTROL SYSTEM (MPI: TRUCK)

NO	PARTS NAME	PARTS NUMBER	ALL	TRK	VAN	COH	NOTE
1	FUEL HOSE	AW100-13-296	1				
2	CLIP	K8574-13-157	2				
3	PRESSURE REGULATOR	GW100-13-280	1				
4	BOLT & WASHER	K90806-2612	4				
5	VACCUM HOSE	D95411-19930	1				
6	CANISTER	KF286-13-970A	1				
8	FUEL HOSE	AW100-13-973A	1				
9	FUEL HOSE	AW100-13-974A	1				
10	CLIP	K99283-0800	4				
11	CLIP	K99283-1300	2				
13	BRACKET	AW100-13-284	1				
14	CLAMP	AA110-13-9A5	1				

1300N EMISSION CONTROL SYSTEM (VAN-COACH: ONLY LEADED E/G)

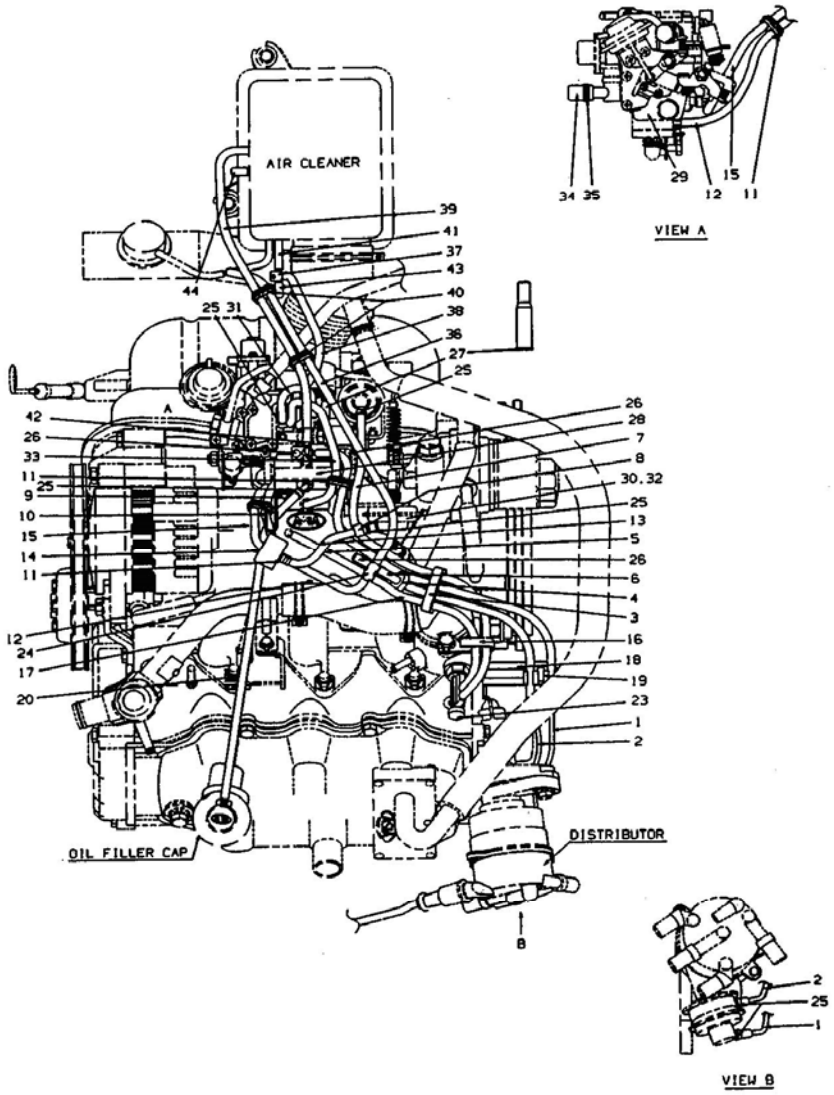

1300N EMISSION CONTROL SYSTEM (VAN-COACH: ONLY LEADED E/G)

NO	PARTS NAME	PARTS NUMBER	ALL	TRK	VAN	COH	NOTE
1	HOSE	AA100-13-BD2			1	1	
2	HOSE	AA100-13-BD1			1	1	
3	CLAMP	AA100-13-XA5			1	1	
4	AIR FILTER ASM	AA100-13-977A			1	1	
5	VACUUM HOSE	D95411-19906			1	1	
6	VACUUM HOSE	D95411-19904			1	1	
7	VACUUM HOSE	AA100-13-XA2			1	1	
8	CLAMP	AA100-13-3C3			1	1	
9	BOLT & WASHER	K90806-2835			1	1	
10	CLIP	K99276-1608			1	1	
11	CLAMP	KKY01-18-291			3	3	
12	HSOE	AA100-13-3C4			1	1	
13	VACUUM HOSE	D95411-19910			1	1	
14	VACUUM TRANSMIT VALVE	AA100-13-3C1A			1	1	
15	HOSE	AA100-13-3C1A			1	1	
16	CLAMP	AA100-13-XA3			1	1	
17	VACUUM HOSE	D95411-19923			1	1	
18	CLAMP	AA100-13-DB4B			1	1	
19	CLAMP	AA100-13-BD3			1	1	
20	OIL FILLER HOSE	AA100-13-743			1	1	
23	VACUMM THERMO SWITCH VALVE	AA100-13-XA1A			1	1	
24	6-WAY	AA100-13-BD5			1	1	
25	CLIP	K99283-0600			6	6	
26	PLUG	KK150-13-104			4	4	
27	LOCK NUT	AA100-13-X50			1	1	
28	INSULATOR	AA100-13-315			1	1	
29	CARBURETOR	AA100-13-600			1	1	
30	POSITIONER	AA100-18-91X			1	1	
31	HOSE	AA100-13-621-PO1			1	1	
32	BOLT & WASHER	K90806-6614			2	2	
33	VACUUM HOSE	AA110-42-961B			1	1	
34	PLUG	AA100-13-635A-PO1			1	1	
35	HOSE CLIP	K99283-1300			1	1	
36	VACUUM HOSE	D95411-19928			1	1	
		KK150-13-104			1	1	EXPORT

1300N EMISSION CONTROL SYSTEM (VAN-COACH: ONLY LEADED E/G)

NO	PARTS NAME	PARTS NUMBER	ALL	TRK	VAN	COH	NOTE
37	3-WAY	AA100-13-ZK1			1	1	
38	VACUUM HOSE	AA110-42-961B			1	1	
39	HOSE	AA110-42-961B			1	1	
40	CLAMP	KKY01-18-291			2	2	
41	VACUUM HOSE	D95411-19904			1	1	
42	CLIP	K99283-0600			1	1	
43	PLUG	KK150-13-104			2	2	

1300N.1 EMISSION CONTROL SYSTEM (MPI: VAN-COACH)

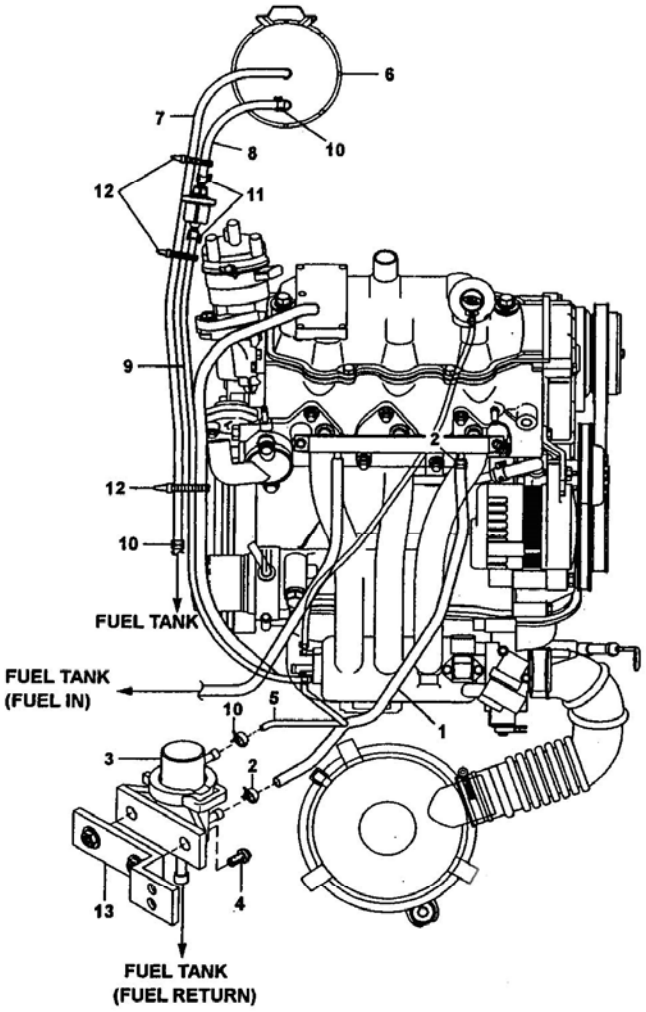

1300N.1 EMISSION CONTROL SYSTEM (MPI: VAN-COACH)

NO	PARTS NAME	PARTS NUMBER	ALL	TRK	VAN	COH	NOTE
1	FUEL HOSE	AW111-13-296			1	1	
2	CLIP	K8574-13-157			2	2	
3	PRESSURE REGULATOR	GW100-13-280			1	1	
4	BOLT & WASHER	K90806-2612			4	4	
5	VACUUM HOSE	AW111-13-295			1	1	
6	CANSISTER	KF286-13-970A			1	1	
7	FUEL HOSE	AW111-13-972B			1	1	
8	FUEL HOSE	AW100-13-973A			1	1	
9	FUEL HOSE	AW111-13-974A			1	1	
10	CLIP	K99283-0800			5	5	
11	CLIP	K99283-1300			2	2	
12	CLAMP	AA110-13-9A5			3	3	
13	PRESSURE REGULATOR BRACKET	AA111-13-284			1	1	

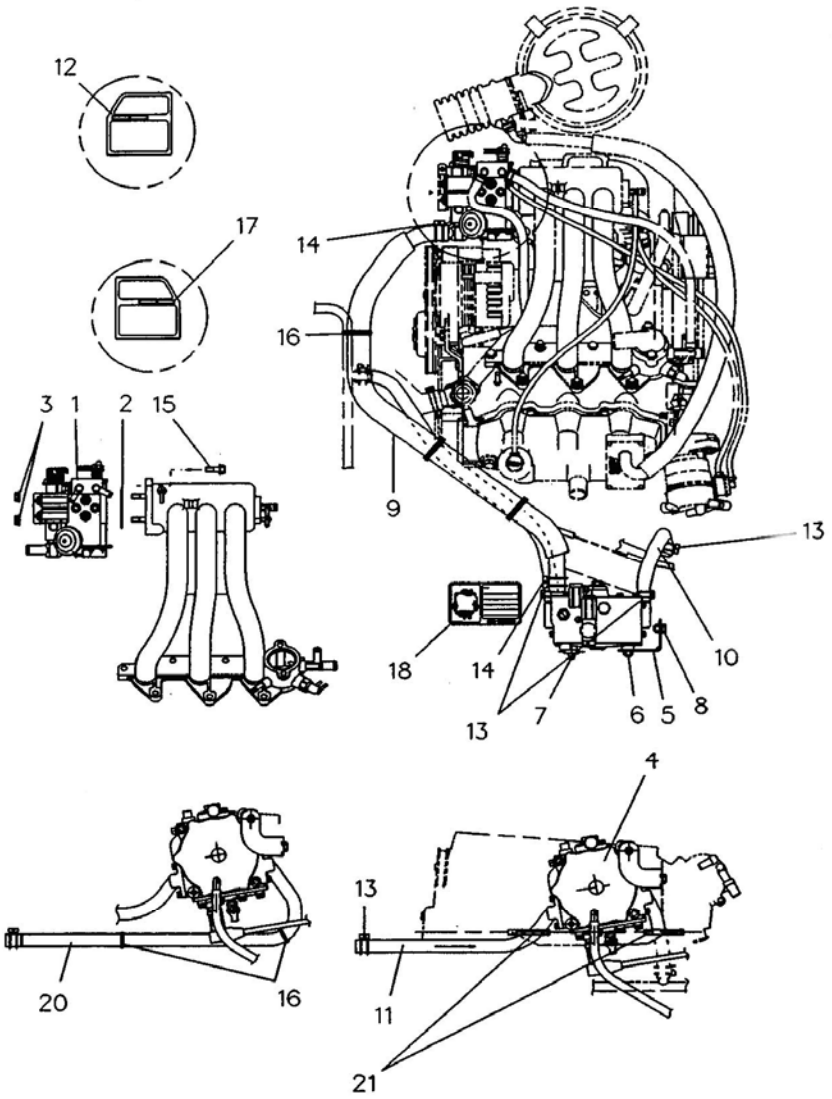
12
17
14
16
3
1
2
15
9
13
10
18
14
13
7
6
5
8
4
13
20
16
11
21

1300O LPG FUEL SYSTEM (VAN-COACH)

NO	PARTS NAME	PARTS NUMBER	ALL	TRK	VAN	COH	NOTE
1	LPG MIXER ASM	AA16A-13-62D			1	1	
2	MIXER GASKET	AA16A-13-655A			1	1	
3	FLANGE NUT	AA100-13-6H6			2	2	
4	VAPORIZER ASM	AA16A-13-950F			1	1	
5	VAPORIZER BRACKET	AA16A-13-940A			1	1	
6	FLANGE BOLT	K99796-0830			1	1	
7	BLANGE BOLT	K99784-0885			1	1	
8	FLANGE BOLT	K99796-0814			1	1	
9	GAS HOSE	AA16A-13-420D			1	1	
10	WATER HOSE	AA161-13-521C			1	1	
11	WATER HOSE	AA151-13-523E			1	1	
12	FUEL LABEL	AA13A-13-95A			1	1	
13	HOSE CLAMP	K99282-2200			4	4	
14	HOSE CLAMP	K99282-2600			2	2	
15	BOLT & WASHER	K90784-0820			1	1	
16	BAND CLAMP	K99709-3200			3	1	
17	CAUTION LABEL	AA16A-13-959			1	1	
18	VAPORIZER LABEL	AA16A-13-958C			1	1	
20	WATER HOSE	AA161-13-527D				1	
21	CLIP	K99289-1053			1	1	

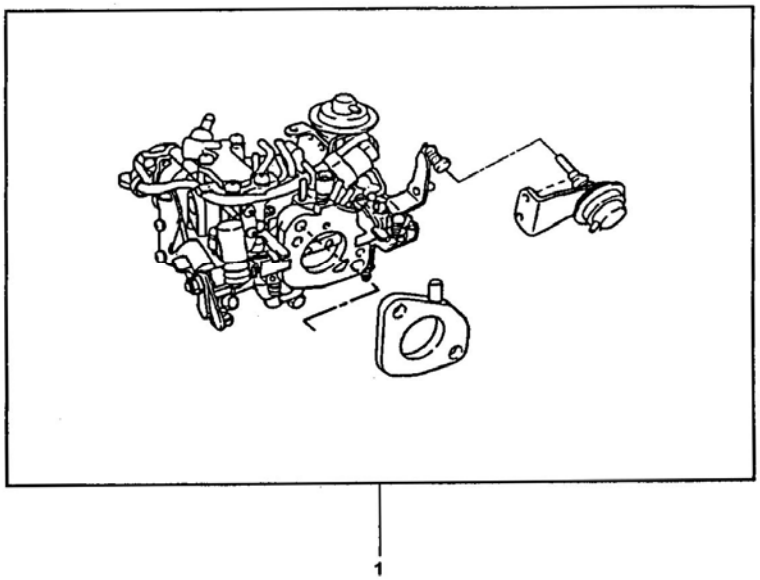
1

1300P CARBURETOR (GASOLINE)

NO	PARTS NAME	PARTS NUMBER	ALL	TRK	VAN	COH	NOTE
1	CARBURETOR ASM	AA100-13-600	1				

1300Q MIXER UNIT (LPG)

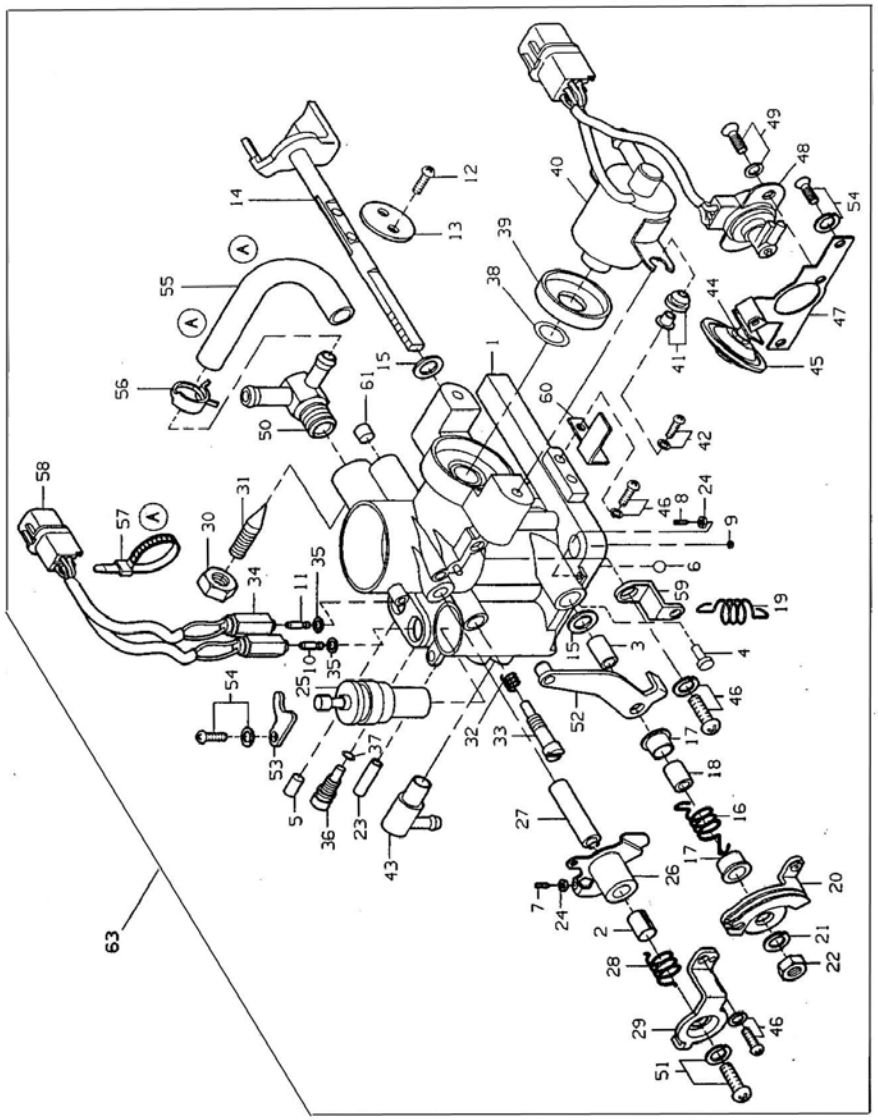

1300Q MIXER UNIT (LPG)

NO	PARTS NAME	PARTS NUMBER	ALL	TRK	VAN	COH	NOTE
1	BODY	2061-T757	1				
2	CAMSHAFT	2146-0131	1				
3	BUSHING	2099-1972	2				
4	HOOK STOPPER PIN	2089-W960	1				
5	PLUG	2092-1351	4				
6	BALL RIVET PLUG	1927-0040	1				
7	ADJUST SCREW	2114-2601	1				
8	ADJUST SCREW	2114-X130	1				
9	SLOW AIR BLEED JET	4482-1002	1				
10	SEAT	2070-1981	1				
11	SEAT	2070-2021	1				
12	VALVE SCREW	1641-3005	2				
13	THROTTLE VALVE	2012-1550	1				
14	THROTTLE SHAFT	3018-T762	1				
15	WASHER	2105-2051	2				
16	SUB RETURN SPRING	2076-U260	1				
17	COLLAR	2100-7351	2				
18	THROTTLE SHAFT COLLAR	2100-T790	1				
19	MAIN RETURN SPRING	6076-Z440	1				
20	THROTTLE LEVER	3019-T801	1				
21	SPRING WASER	1934-0080	1				
22	NUT	1953-0080	1				
23	VACUUM PIPE	2104-0861	1				
24	HEXAGON NUT	2118-C250	2				
25	PELLET COMPLETE	6158-0021	1				
26	FAST IDLE CAM ASM	3091-T813	1				
27	FAST IDLE CAMSHAFT	2089-R804	1				
28	CAM RETURN SPRING	2076-U110	1				
29	CAM SPRING STOPPER	2078-R821	1				
30	MAIN ADJUST SCREW	2033-W030	1				
31	NUT	2117-B910	1				
32	AIR ADJUST SPRING	2175-111	1				

1300Q MIXER UNIT (LPG)

NO	PARTS NAME	PARTS NUMBER	ALL	TRK	VAN	COH	NOTE
33	AIR ADJUST SCREW	2034-1393	1				
34	SOLENOID ASM	3070-P111	2				
35	GASKET	1971-0120	2				
36	IDLE UP SCREW	2114-1911	2				
37	“O” RING	2084-5171	2				
38	“O” RING	2084-5051	1				
39	GASKET	2116-1801	1				
40	SOLENOID ASM	3070-V590	1				
41	WASHER	2105-0704	2				
42	SCREW & WASHER	1600-6020	2				
43	WATER PIPE ASM	3104-Y201	2				
44	DASHPOT NUT	218-0991	1				
45	DASHPOT	6148-Q790	1				
46	SCREW & WASHER	1630-6012	4				
47	THROTTLE SENSOR BRACKET	3023-U362	1				
48	THROTTLE SENSOR ASM	3133-U310	1				
49	SCREW	3085-B211	2				
50	FUEL CONNECTOR ASM	3061-T840	1				
51	SCREW & WASHER	1660-4008	1				
52	CAM ADJUST ARM ASM	3081-U273	1				
53	CAM HOLDER	2678-3761	1				
54	SCREW & WASHER	1636-5012	4				
55	HOSE	2104-5871	1				
56	CLAMP	2145-0161	2				
57	HOSE BAND	2145-C490	1				
58	CONNECTOR	7318-R850	1				
59	MAIN SPRING BRACKET ASM	3023-U341	1				
60	CONNECTOR CLIP	2078-T862	1				
61	PLUG	2092-1351	1				
62	CAMSHAFT SHEET	2146-0131	1				
63	MIXER ASM	AA16A-13-620D		1			TRK
		AA161-13-620D			1	1	

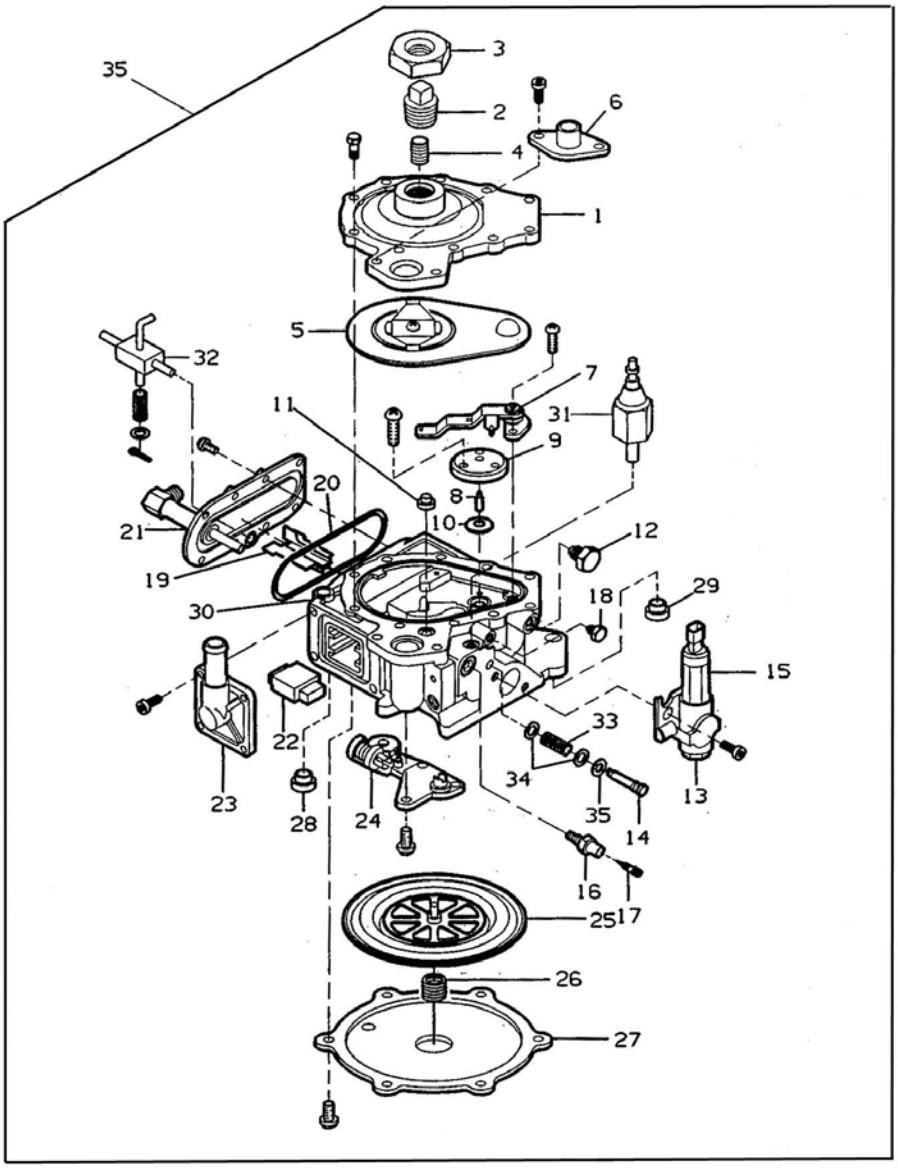
35
3
2
6
4
1
5
32
7
31
11
9
20
8
10
21
12
19
29
18
30
15
22
33
34
23
28
24
35
14
13
16
17
25
26
27

1300R VAPORIZER (LPG)

NO	PARTS NAME	PARTS NUMBER	ALL	TRK	VAN	COH	NOTE
1	COVER	2002-2014	1				
2	PRESSURE ADJUST SCREW	X944-7491	1				
3	LOCK NUT	2118-0193	1				
4	SPRING	X943-7481	1				
5	DIAPHRAGM ASM	3125-4961	1				
6	FUEL OUTLET PIPE	3062-T300	1				
7	VALVE ASM	6071-Q370	1				
8	BALANCE SHAFT	X944-2414	1				
9	BALANCE PLATE	X944-4341	1				
10	BALANCE DIAPHRAGM	X944-4333	1				
11	SEAT PLATE	X944-2632	1				
12	PRESSURE PLUG	2085-1942	1				
13	PLUG	X944-2502	1				
14	SPRING ADJUST ROD	X944-2571	1				
15	SOLENOID	3070-7751	1				
16	ADJUST SCREW SEAT	2056-1961	1				
17	SLOW ADJUST SCREW	2034-1851	1				
18	PLUG	2058-0242	1				
19	PARTITION PLATE	Y944-8811	1				
20	“O” RING	2084-5591	1				
21	FUEL COVER ASM	3005-W142	1				
22	“O” RING	2084-X880	1				
23	WATER COVER	2005-Y960	2				
24	VALVE	6071-S780	1				
25	DIAPHRAGM ASM	3125-4971	1				
26	SPRING	2075-8761	1				
27	REGULATOR COVER	3005-X142	1				
28	COLLAR	2100-V071	1				
29	COLLAR	2100-V071	1				
30	BODY	3601-Q032	1				
31	SLOW SOLENOID	3070-1504	1				
32	DRAIN COCK	6082-X631	1				
33	SPRING	2175-0021	1				
34	WASHER	1931-0050	2				

1300R VAPORIZER (LPG)

NO	PARTS NAME	PARTS NUMBER	ALL	TRK	VAN	COH	NOTE
35	STOP RING	1050-0040	1				
36	VAPORIZER ASM	AA16A-13-950F	1				

1400A OIL PUMP

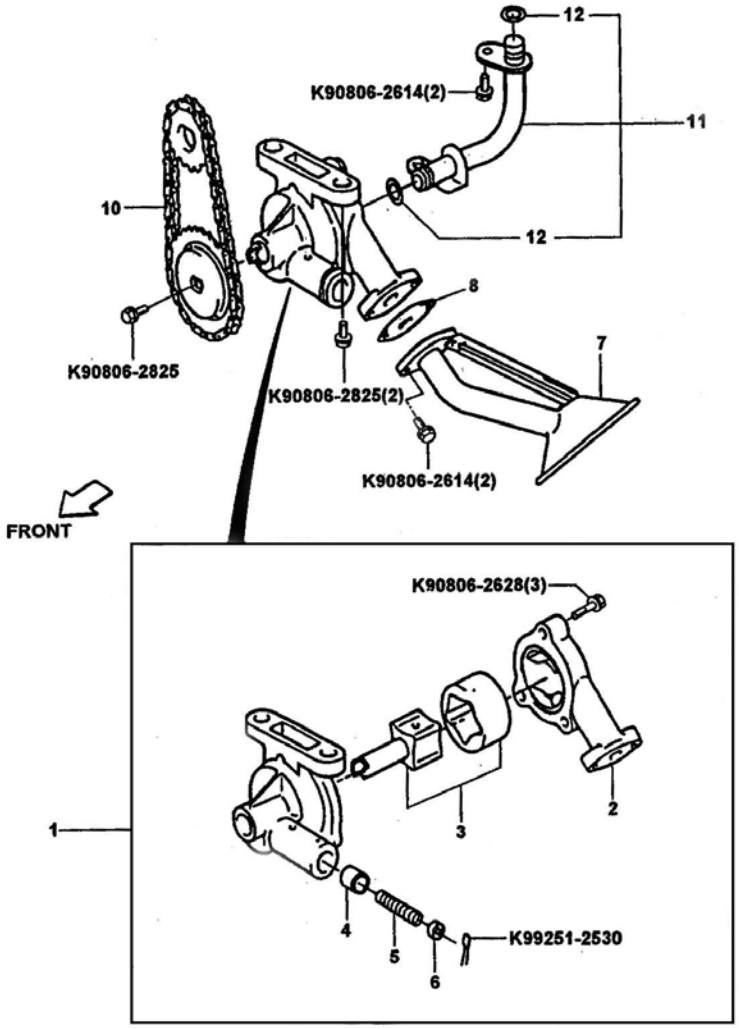

1400A OIL PUMP

NO	PARTS NAME	PARTS NUMBER	ALL	TRK	VAN	COH	NOTE
1	OIL PUMP ASM	AA100-14-1A0	1				
2	OIP PUMP COVER	AA100-14-121	1				
3	OIL PUMP ROTOR SET	AA100-14-132A	1				
4	OIL PUMP RELIEF VALVE	AA100-14-115	1				
5	COMPRESSION SPRING	AA100-14-152	1				
6	RELIEF VALVE RETAINER	AA100-14-118	1				
7	OIL PUMP SCREEN	AA100-14-240C	1				
8	OIL PUMP STRAINER	AA100-14-248	1				
9	DRIVE SHAFT SPROCKET	AA100-14-143	1				
10	DRIVE CHAIN SUB ASM	AA100-14-151	1				
11	OIL PUMP OUTLET PIPE	AA100-14-260	1				
12	“O” RING	AA100-23-805	1				

1400B OIL FILTER

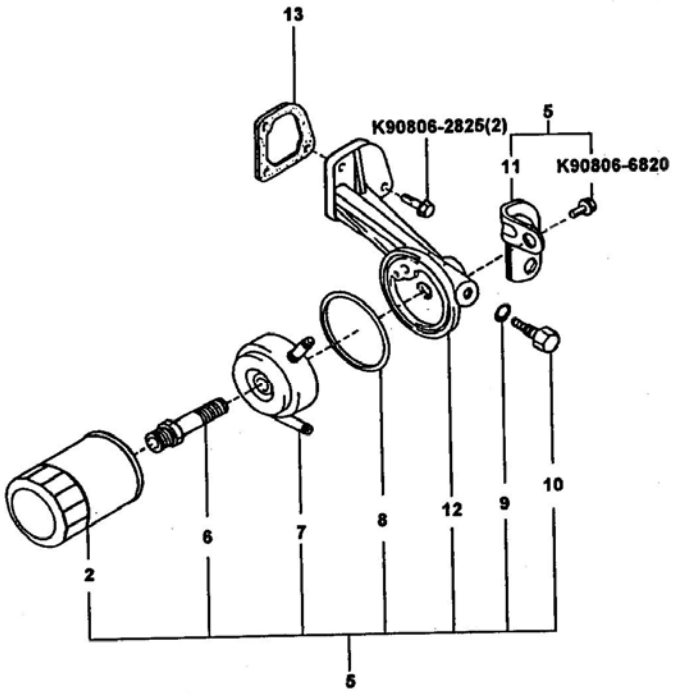

1400B OIL FILTER

NO	PARTS NAME	PARTS NUMBER	ALL	TRK	VAN	COH	NOTE
2	OIL FILTER	AA100-29-902 (263002Y500)	1				
5	OIL FILTER ASM	AA100-14-300A	1				
6	OIL COOLER SET BOLT	AA100-14-458	1				
7	OIL COOLER ASM	AA100-14-700A					
8	“O” RING	D96732-35071	1				
9	GASKET	AA100-14-365	1				
10	OIL PRESSURE VALVE	AA100-14-116	1				
11	OIL FILTER BRACKET STAY	AA100-14-331	1				
12	OIL FILTER MOUNTING HOUSING	AA100-14-770 (AA16A-14-770)	1				
13	OIL FILTER GASKET	AA100-14-342	1				

1500A WATER PUMP

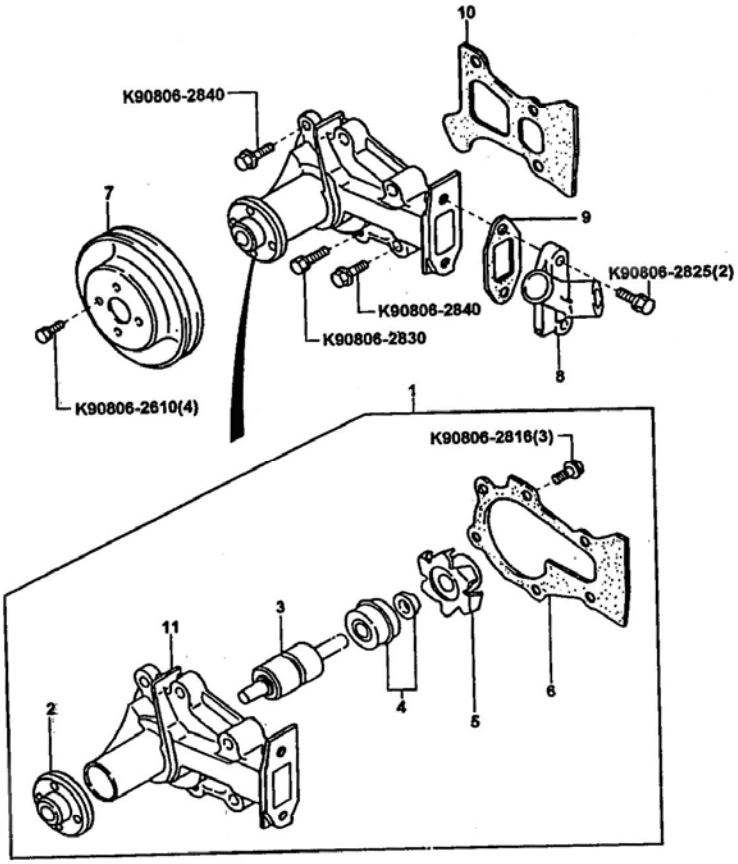

1500A WATER PUMP

NO	PARTS NAME	PARTS NUMBER	ALL	TRK	VAN	COH	NOTE
1	WATER PUMP ASM	AA100-15-010B (AA100-15-010AS-1)	1				
2	WATER PUMP PULLEY SEAT	AA100-15-1A1	1				
3	WATER PUMP BEARING	AA100-15-112	1				
4	WATER PUMP SEAL	AA100-15-120	1				
5	WATER PUMP ROTOR	AA100-15-111A	1				
6	WATER PUMP BODY GASKET	AA100-15-116	1				
7	WATER PUMP PULLEY	AA16A-15-131	1				
8	WATER INLET	AA100-15-A161	1				
9	WATER INLET GASKET	AA100-15-A165	1				
10	WATER PUMP GASKET	AA100-15-162B	1				
11	WATER PUMP BODY	AA100-15-101B	1				

WATER OUTLET PIPING

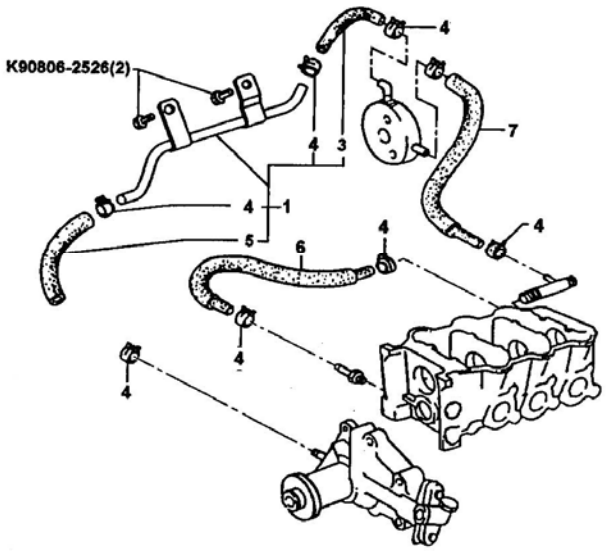

1500B WATER OUTLET PIPING

NO	PARTS NAME	PARTS NUMBER	ALL	TRK	VAN	COH	NOTE
1	WATER BY-PASS HOSE	AA100-15-280D	1				
		AA16A-15-280B	1				LPG
3	WATER BY-PASS NO.2 HOSE	AA100-15-292B	1				
4	CLIP	A9283-15121	8				
5	HOSE	AA100-15-284A	1				
6	WATER BY-PASS HOSE	AA100-15-281C	1				
		AW100-15-281	1				MPI
7	HOSE	AA100-15-291A	1				
		AA16A-15-291	1				LPG
		AW100-15-291	1				MPI

1500C COOLING SYSTEM (TRUCK)

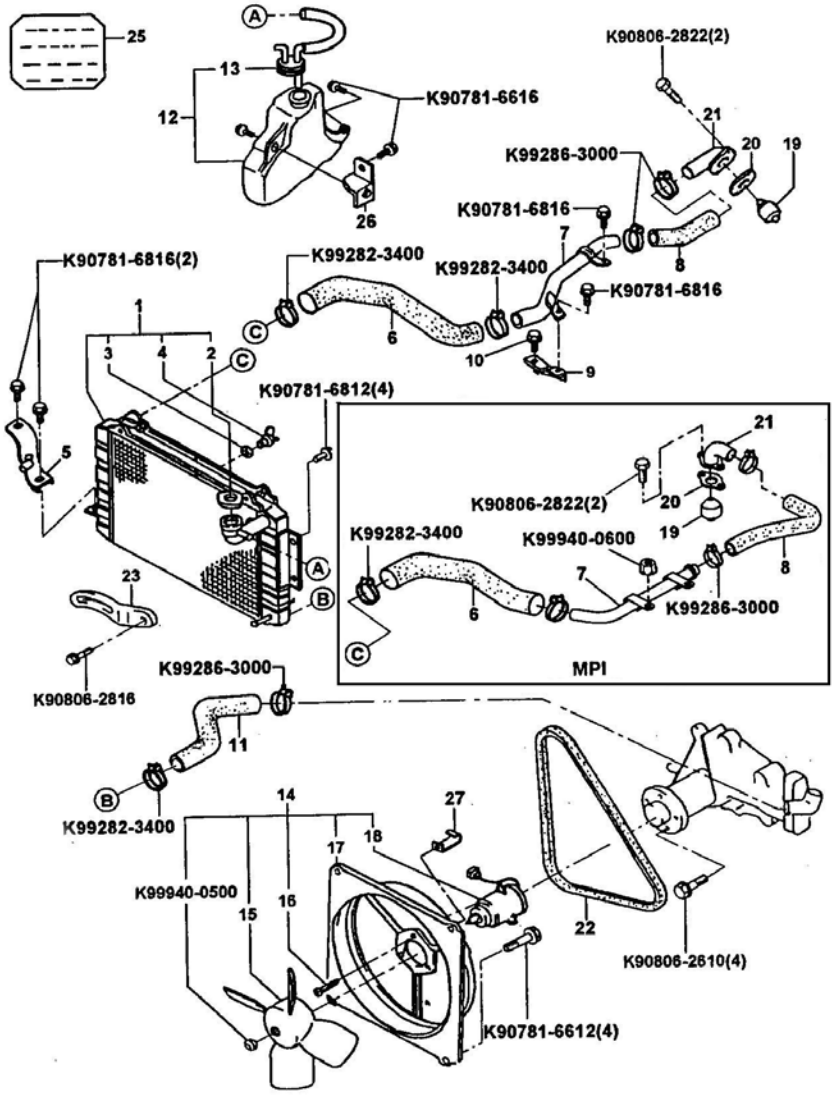

1500C COOLING SYSTEM (TRUCK)

NO	PARTS NAME	PARTS NUMBER	ALL	TRK	VAN	COH	NOTE
1	RADIATOR	AA16A-15-200B		1			
2	RADIATOR CAP	AA110-15-205A		1			
3	“O” RING	45300030		1			
4	DRAIN COCK	45700030		1			
5	RADIATOR BRACKET	AA100-15-231		1			
6	WATER UPPER HOSE	AA16A-15-193A		1			
7	WATER PIPE	AA16A-15-196		1			
		AW100-15-196		1			MPI
8	WATER UPPER HOSE	AA16A-15-186		1			
		AW100-15-186		1			MPI
9	WATER PIPE BRACKET	AA100-15-195A		1			W/O MPI
10	WATER & BOLT	K99796-1220		1			W/O MPI
11	WATER LOWER HOSE	AA16A-15-185A		1			
12	RESERVE TANK	AA16A-15-350B		1			
13	RESERVE TANK CAP	AA16A-15-355B		1			
14	RADIATOR ELECTRIC COOLING FAN	AA100-15-025A		1			
15	COOLING FAN	AA100-15-140		1			
16	SCREW & WASHER	AA100-15-226		3			
17	RADIATOR COWLING ASM	AA100-15-210		1			
18	FAN MOTOR	AA100-15-150		1			
19	THERMOSTAT	AA100-15-171A		1			
20	THERMOSTAT GASKET	AA100-15-173		1			
21	THERMOSTAT HOUSING	AA100-15-172B		1			
22	“V” BELT	AA16A-18-381		1			
23	ALTERNATOR STRAP	AA100-18-361B		1			
25	RESERVE TANK LABEL	AA100-15-357B		1			
26	RESERVE TANK BRACKET	AA110-15-390		1			
27	CLIP	AA16A-13-422		1			LPG

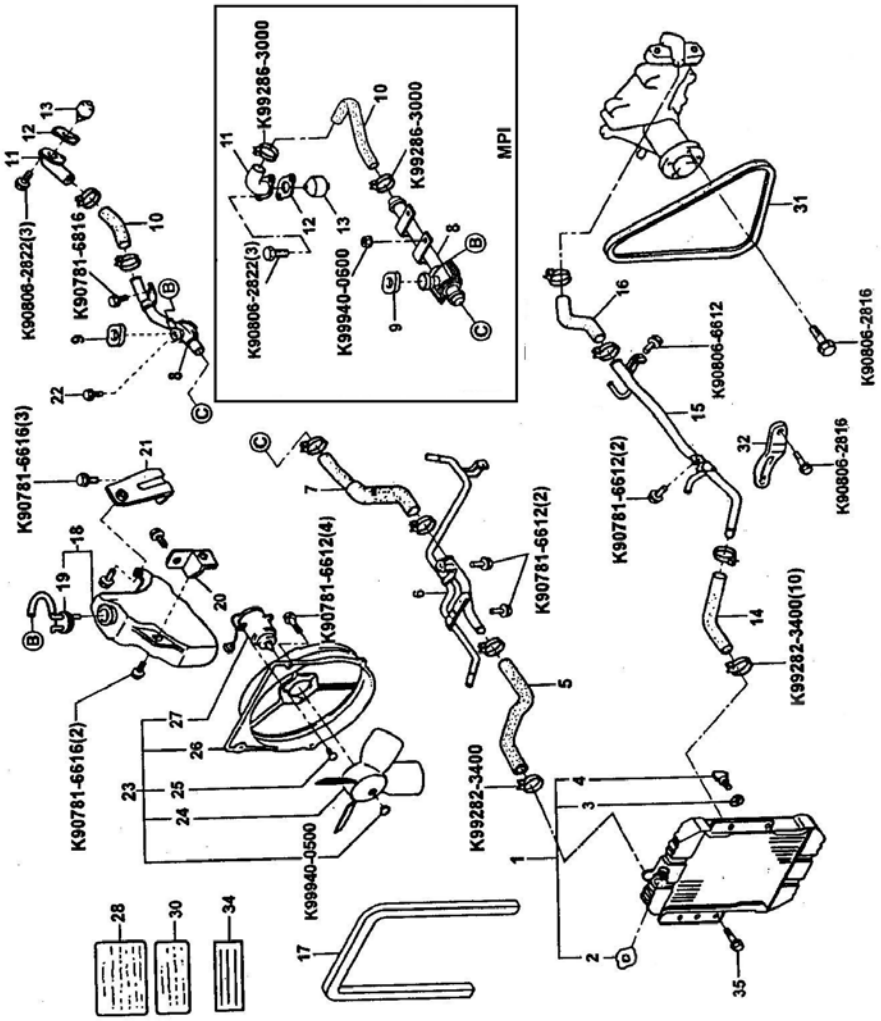
K90806-2822(3)
K90781-6816
K90781-6616(3)
K90781-6616(2)
K90781-6612(4)
K99940-0500
K99282-3400
K90781-6612(2)
K99286-3000
K99940-0600
MPI
K90806-6612
K99282-3400(10)
K90806-2816

1500D COOLING SYSTEM (VAN-COACH)

NO	PARTS NAME	PARTS NUMBER	ALL	TRK	VAN	COH	NOTE
1	RADIATOR	AA161-15-200C			1	1	
2	RADIATOR CAP	AA110-15-205A			1	1	
3	“O” RING	45300030			1	1	
4	DRAIN COCK	45700040			1	1	
5	WATER UPPER HOSE	AA110-15-194C			1	1	
6	WATER UPPER PIPE	AA110-15-197C			1	1	
7	WATER UPPER HOSE	AA110-15-193			1	1	
8	WATER UPPER PIPE	AA110-15-196F			1	1	
		AA161-15-196A			1	1	LPG
		AW111-15-196A			1	1	MPI
9	RADIATOR CAP	AA110-15-205A			1	1	
10	WATER UPPER HOSE	AA16A-15-186			1	1	
		AW111-15-186A			1	1	MPI
11	THERMOSTAT HOUSING	AA100-15-172B			1	1	
12	THERMOSTAT GASKET	AA100-15-173			1	1	
13	THERMOSTAT	AA100-15-171A			1	1	
14	WATER LOWER HOSE	AA110-15-185B			1	1	
15	WATER PIPE	AA110-15-190B			1	1	VAN, 5 COH
		AA131-15-190				1	
		AW111-15-020			1	1	MPI, 2P VAN, 5P VAN-COH
16	WATER LOWER HOSE	AA110-15-184B			1	1	
17	RADIATOR UPPER SEAL	AA110-15-410[a]			1	1	
18	RESERVE TANK	AA110-15-350D			1	1	
19	RESERVE TANK CAP	AA110-15-355C			1	1	
20	RESERVE TANK BRACKET	AA110-15-390			1	1	
21	RESERVE TANK BRACKET	AA110-15-370			1	1	
22	BOLT & WASHER	K99796-1220			1	1	

1500D COOLING SYSTEM (VAN-COACH)

NO	PARTS NAME	PARTS NUMBER	ALL	TRK	VAN	COH	NOTE
23	RADIATOR ELECTRIC COOLING FAN	AA110-15-025			1	1	POONG SUNG
		AA111-15-025			1	1	MANDO
24	COOLING FAN	AA110-15-140			1	1	
25	SCREW & WASHER	AA100-15-226			3	3	
26	RADIATOR COWLING	AA110-15-210			1	1	
27	FAN MOTOR	AA110-15-150			1	1	
28	RADIATOR LABEL	AA110-15-031B			1	1	
		AA110-15-031B-PO1			1	1	EXPORT
30	RESERVE TANK LABEL	AA110-15-033B			1	1	
		AA110-15-033B-PO1			1	1	EXPORT
31	“V” BELT	AA16A-18-381			1	1	
32	ALTERNATOR STRAP	AA100-18-361B			1	1	
34	RESERVE TANK LABEL	AA100-15-357B			1	1	
35	BOLT	K99796-0820			4	4	

1600 CLUTCH DISC & COVER

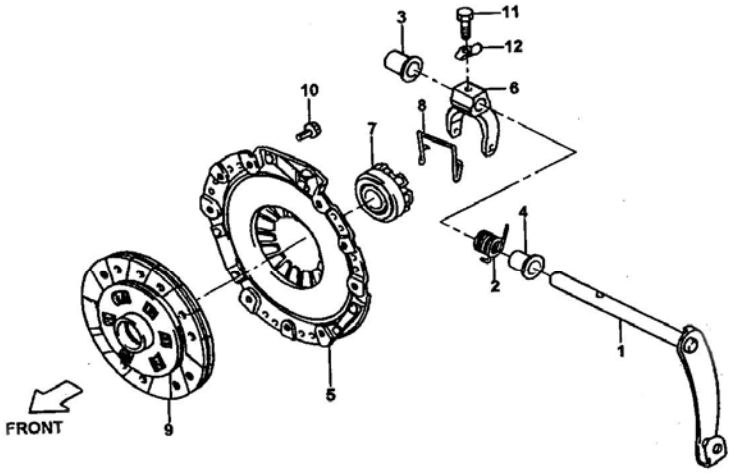

1600 CLUTCH DISC & COVER

NO	PARTS NAME	PARTS NUMBER	ALL	TRK	VAN	COH	NOTE
1	CLUTCH LEVER ASM	AA100-16-530	1				
2	RETURN SPRING	AA100-16-515	1				
3	BUSHING	AA100-16-155	1				
4	BUSHING	AA100-16-154	1				
5	PRESSURE PLATE	AA100-16-410B (AA100-16-410AS)	1				
6	CLUTCH RELEASE LEVER FORK	AA100-16-521	1				
7	THROW-OUT BEARING (RELEASE)	AA100-16-510A	1				
8	CLOOLER SPRING	AA100-16-513A	1				
9	CLUTCH DIS	AA100-16-460AS	1				
10	BOLT & WASHER	K90801-2820	6				
11	BOLT	AA100-16-522	1				
12	LOCK WASHER	AA100-16-523					

1700A TRANSMISSION CASE

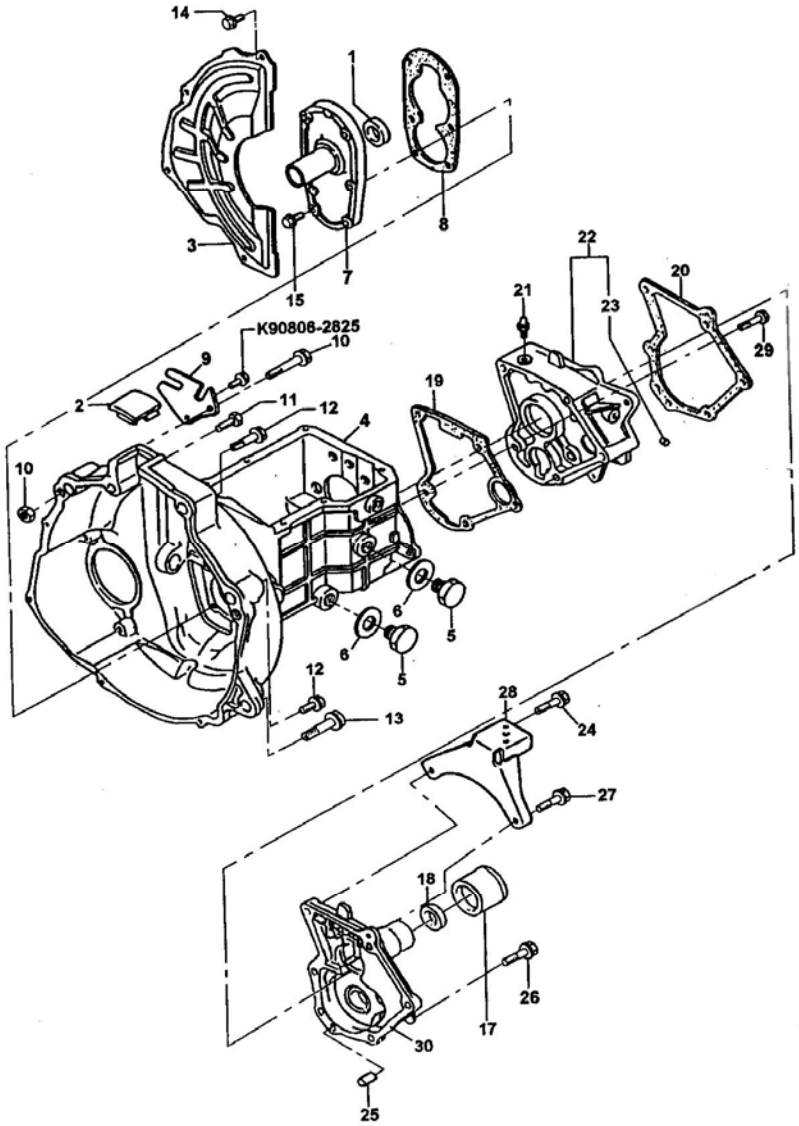

1700A TRANSMISSION CASE

NO	PARTS NAME	PARTS NUMBER	ALL	TRK	VAN	COH	NOTE
1	OIL SEAL	AA100-16-103A	1				
2	CLUTCH HOUSING COVER	AA100-16-156	1				
3	UNDER COVER ASM	AA100-16-140B	1				
4	TRANSMISSION CASE	AA100-17-101D	1				
5	PLUG	AA100-26-051A	2				
6	WASHER (SOFT)	AA100-26-055	3				
7	FRONT COVER	AA100-16-221C	1				
8	GASKET	AA100-16-225A	1				
9	TRNASMISSION CONTROL BRACKET	AA16A-46-171C	1				
10	BOLT & WASHER	K99796-1280	1				
	NUT	K99921-1200	1				
11	BOLT	K90811-21055	1				
12	BOLT & WASHER	D91619-61255	2				
13	BOLT	AA100-16-317	1				
14	BOLT & WASHER	K907812-0610	4				
15	BOLT & WASHER	AA100-16-222	6				
17	SEALING CAP	AA100-17-334	1				
18	OIL SEAL	AA100-10-335A	1				
19	GASKET	AA100-17-317A	1				
20	GASKET	AA100-17-328ª	1				
21	BREATHER ASM	AA100-17-530	1				
22	CENTER HOUSING	AA100-17-321C	1				
23	PLUG	D96411-81200	1				
24	BOLT & WASHER	AA100-17-337	1				
25	STRAIGHT PIN	K99233-0816	2				
26	BOLT & WASHER	D91611-60835	3				
27	BOLT & WASHER	AA100-17-339	1				
28	TRANSMISSION MOUNTING BRACKET	AA100-39-331	1				
29	BOLT & WASHER	D91611-61025	2				
30	REAR COVER	AA100-17-331ª	1				
31	TRANSMISSION ASM	AA101-03-000	1				

1700B SPEEDOMETER GEAR

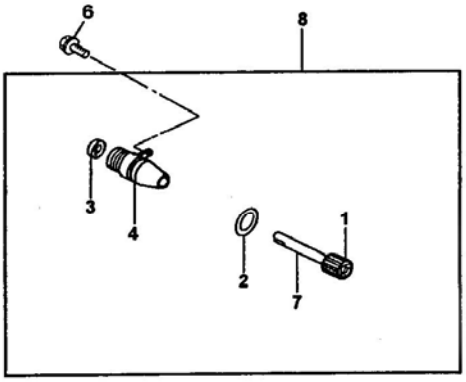

1700B SPEEDOMETER GEAR

NO	PARTS NAME	PARTS NUMBER	ALL	TRK	VAN	COH	NOTE
1	SPEEDOMETER DRIVEN GEAR	AA100-17-441A	1				5.375
2	“O” RING	D96711-24020	1				
3	OIL SEAL	AA100-17-445	1				
4	SPEEDOMETER SHAFT SLEEVE	AA100-17-442C	1				
6	BOLT & WASHER	K90806-2616	1				
7	SPEEDOMETER DRIVEN SHAFT	AA100-17-443A	1				
8	SPEEDOMTER SLEEVE ASM	AA100-17-440D	1				

1700C TRANSMISSION GEAR

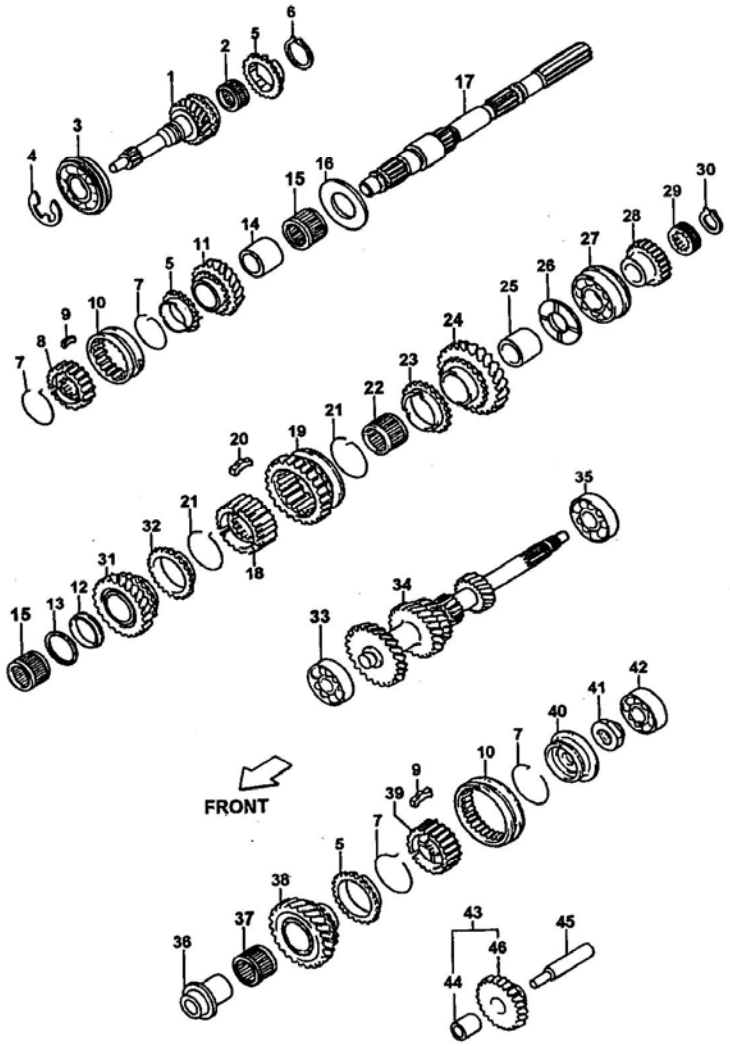

1700C TRANSMISSION GEAR

NO	PARTS NAME	PARTS NUMBER	ALL	TRK	VAN	COH	NOTE
1	MAIN DRIVE SHAFT	AA100-17-201A	1				
2	NEEDLE ROLLER BEARING	AA100-17-210	1				SEL.USE
		AA101-17-210	1				SEL.USE
3	RADIAL BALL BEARING	AA100-17-205B	1				SEL.USE
		AA101-17-205	1				SEL.USE
4	“E” RING	AA100-16-104	1				
5	SYNCHRONIZER NO.1	AA100-17-245	3				
6	SNAP RING	AA100-17-225	1				1=1.3
		AA100-17-226	1				1=1.4
		AA100-17-227	1				1=1.5
		AA100-17-228	1				1=1.2
7	SYNCHRONIZER KEY SPRING	AA100-17-224	4				
8	CLUTCH HUB 3rd & 4th	AA100-17-241A	1				
9	SYNCHROMESH NO.2 KEY	AA100-17-243A	6				
10	TRANSMISSION HUB SLEEVE	AA100-17-242	2				
11	3rd GEAR	AA100-17-231	1				
14	3rd SPACER	AA100-17-233	1				
15	NEEDLE ROLLER BEARING	AA102-17-275	2				
16	3rd GEAR THRUST WASHER	AA100-17-234	1				
17	MAIN SHAFT	AA100-17-221	1				
18	CLUTCH HUB 1st & 2nd	AA100-17-260	1				
19	REVERSE GEAR	AA100-17-281	1				
20	SYNCHROMESH NO.1 KEY	AA100-17-264[a]	1				
21	SYNCHROMESH SHIFTING KEY SPRING	AA100-17-265[a]	1				
22	NEEDLE ROLLER BEAIRNG	AA100-17-275	1				SEL.USE
		AA101-17-275					SEL.USE
		AA102-17-275	1				SEL.USE

1700C TRANSMISSION GEAR

NO	PARTS NAME	PARTS NUMBER	ALL	TRK	VAN	COH	NOTE
23	SYNCHRONIZER NO.3	AA100-17-267	1				
24	1st GEAR	AA100-17-271	1				
25	1st SPACER	AA100-17-273	1				
26	1st EAR THRUST WASHER	AA100-17-274	1				
27	RADIAL BALL EARING	AA100-17-295B	1				
28	5th GEAR	AA100-17-611	1				
29	SPEEDOMETER DRIVE GEAR	AA100-17-341A	1				
30	SNAP RING	AA100-17-342	1				1=1.2
		AA100-17-343	1				1=1.3
		AA100-17-344	1				1=1.4
		AA100-17-345	1				1=1.5
		AA100-17-346	1				1=1.6
		AA100-17-347	1				1=1.7
31	2nd GEAR	AA100-17-251	1				
32	SYNCHRONIZER NO.2	AA100-17-266	1				
33	RADIAL BLL BEARING	AA100-17-206B	1				
34	COUNTER SHAFT ASM	AA100-17-300	1				
35	RADIAL BALL BEARING	AA100-17-207	1				
36	5th SPACER	AA100-17-613	1				
37	NEEDLE ROLLER BEARING	AA100-17-292	1				SEL.USE
		AA101-17-292	1				SEL.USE
		AA102-17-292	1				SEL.USE
38	COUNTER SHAFT GEAR 5th	AA100-17-508	1				
39	CLUTCH HUB 5th	AA100-17-621A	1				
40	SHIFT KEY RETAINER	AA100-17-303	1				
41	LOCK NUT	AA100-17-309	1				
42	RADIAL BALL BEARING	AA100-17-299	1				
43	REVERSE IDLER GEAR SHAFT	AA100-17-310	1				

1700C TRANSMISSION GEAR

NO	PARTS NAME	PARTS NUMBER	ALL	TRK	VAN	COH	NOTE
44	BUSHING	AA100-17-312	1				
45	REVERSE IDLER GEAR SHAFT	AA100-17-313	1				
46	REVERSE IDLER GEAR	AA100-17-311A	1				

1700D CHANGE CONTROL TOP SYSTEM

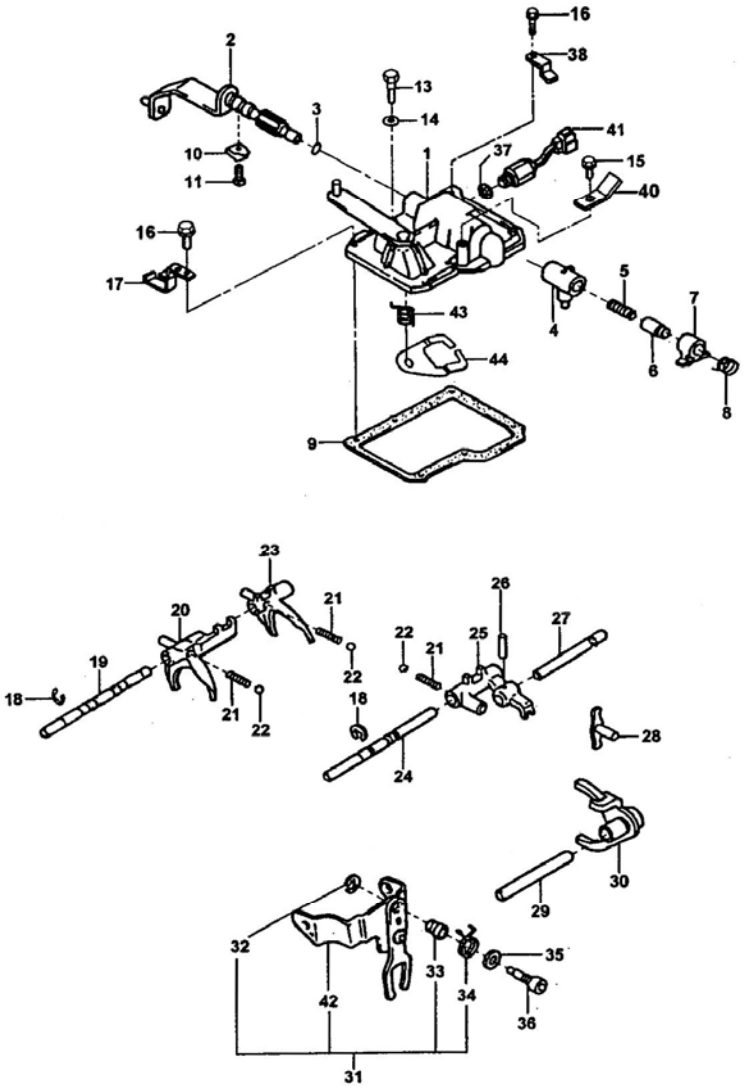

1700D CHANGE CONTROL TOP SYSTEM

NO	PARTS NAME	PARTS NUMBER	ALL	TRK	VAN	COH	NOTE
1	TOP COVER ASM	AA100-17-431A	1				
2	SHIFTER LEVER ASM	AA16A-17-450A	1				
3	“O” RING	AA100-17-454	1				
4	SHIFT INNER LEVER	AA100-17-461	1				
5	SHIFT LEVER SPRING	AA110-17-485	1				
6	SHIFT LEVER STOPPER	AA100-17-467	1				
7	REVERSE GATE	AA100-17-466	1				
8	SPRING	AA100-17-468	1				
9	GASKET	AA100-17-463	1				
10	LOCK WASKER	AA100-17-469	1				
11	SET BOLT	AA100-17-462	1				
13	BOLT	AA100-17-432	1				
14	WAVE WASHER	K99971-0600	1				
15	BOLT & WASHER	D91611-60655	1				
16	“E” RING	D91611-60625	4				
17	WIRING HARNESS CLAMP	AA100-17-641	1				
18	“E” RING	D96160-00900	2				
19	1st & 4th SHIFT ROD	AA100-17-413B	1				
20	3rd & 4th SHIFT FORK	AA100-17-412A	1				
21	COMPRESSION SPRING	AA100-17-411	3				
22	BALL	K99611-2500	1				
23	1st & 2nd SHIFT FORK	AA100-17-402	1				
24	5th & REVERSE SHIFT ROD	AA100-17-421[a]	1				
25	REVERSE SHIFT FORK	AA100-17-405	1				
26	SLOTTED SPRING PIN	K99222-0420	1				
27	5th SHIFT LEVER	AA100-17-403[a]	1				
28	5th SHIFT ARM	AA100-17-408	1				
29	5th SHIFT SHAFT	AA100-17-407	1				
30	5th SHIFT FORK	AA100-17-406	1				
31	REVERSE SHIFT ARM ASM	AA100-17-490A	1				

1700D CHANGE CONTROL TOP SYSTEM

NO	PARTS NAME	PARTS NUMBER	ALL	TRK	VAN	COH	NOTE
32	“E” RING	D96160-01200	1				
33	CAM ROLLER	AA100-17-495	1				
34	TORSION SPRING	AA100-17-497	1				
35	SOFT WASHER	K99564-1200	1				
36	SHIFT ARM PIVOT	AA100-17-493	1				
37	SOFT WASHER	AA100-26-055	1				
38	CLAMP	K99279-3006		1			RK: W/O GAS
40	AIR HOS EBRACKET	AA110-13-342A	1				
41	BACK-UP LAMP SWITCH	AA100-17-640	1				
42	REVERSE SHIFT ARM	AA100-17-491	1				
43	TORSION SPRING	AA110-17-465	1				
44	SELECTION GATE	AA100-17-464A	1				

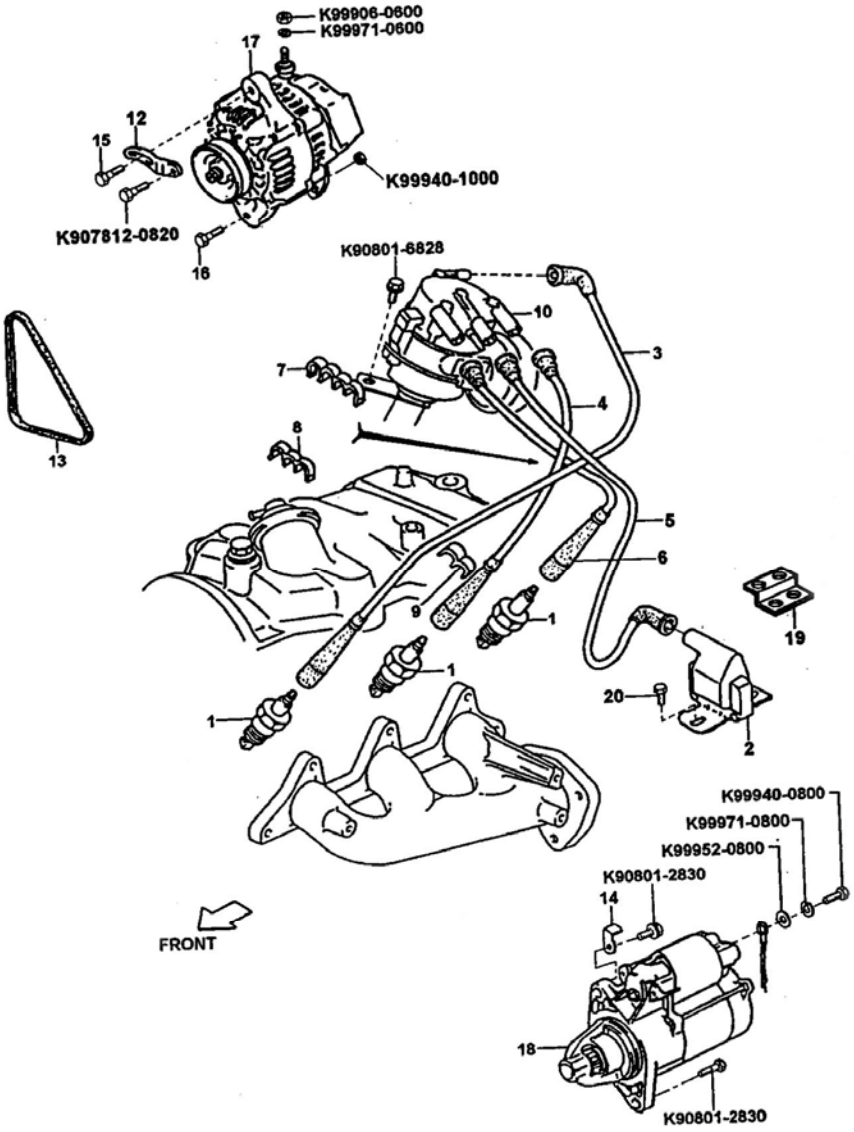
K99906-0600
K99971-0600
17
12
15
K99940-1000
K907812-0820
16
K90801-6828
10
3
7
4
8
13
5
6
9
1
19
1
20
1
2
K99940-0800
K99971-0800
K99952-0800
K90801-2830
14
FRONT
18
K90801-2830

1800A ENGINE ELECTRICAL SYSTEM

NO	PARTS NAME	PARTS NUMBER	ALL	TRK	VAN	COH	NOTE
1	SPARK PLUG	AA100-18-110AS	3				
		AA13A-18-110	3				LPG
		AAW00-18-110	3				EXPORT: LEADED
2	IGNITION COIL	AA100-18-100B AA131-18-100B	1				
3	PLUG WIRES (SET)	AA100-CB-151	1				
7	CLAMP	AA100-13-XA5	1				
8	CLAMP	AA100-13-447		1			
9	CLAMP	AA100-18-291	2				
10	DISTRIBUTOR ASM	AA100-18-200C	1				
		AA16A-18-200	1				LPG
		AW100-18-200	1				MPI
12	ALTERNATOR STRAP	AA100-18-361B	1				
13	“V” BELT	AA16A-18-381A	1				
14	AIR PIPE BRACKET	AA110-13-341			1	1	
15	BOLT & WASHER	AA100-18-391	1				
16	BOLT & WASHER	AA100-18-391	1				
		AA16A-18-391	1				LPG
17	ALTERNATOR ASM	AA111-18-300C	1				12V,50A
		AA16B-18-300	1				12V50A: LPG
18	STARTER ASM	AA101-18-400	1				
19	IGNITION COIL BRACKET	AA16A-18-105	1				LPG
20	BOLT	K90797-6614	2				

1800A.1 ENGINE ELECTRICAL SYSTEM (MPI)

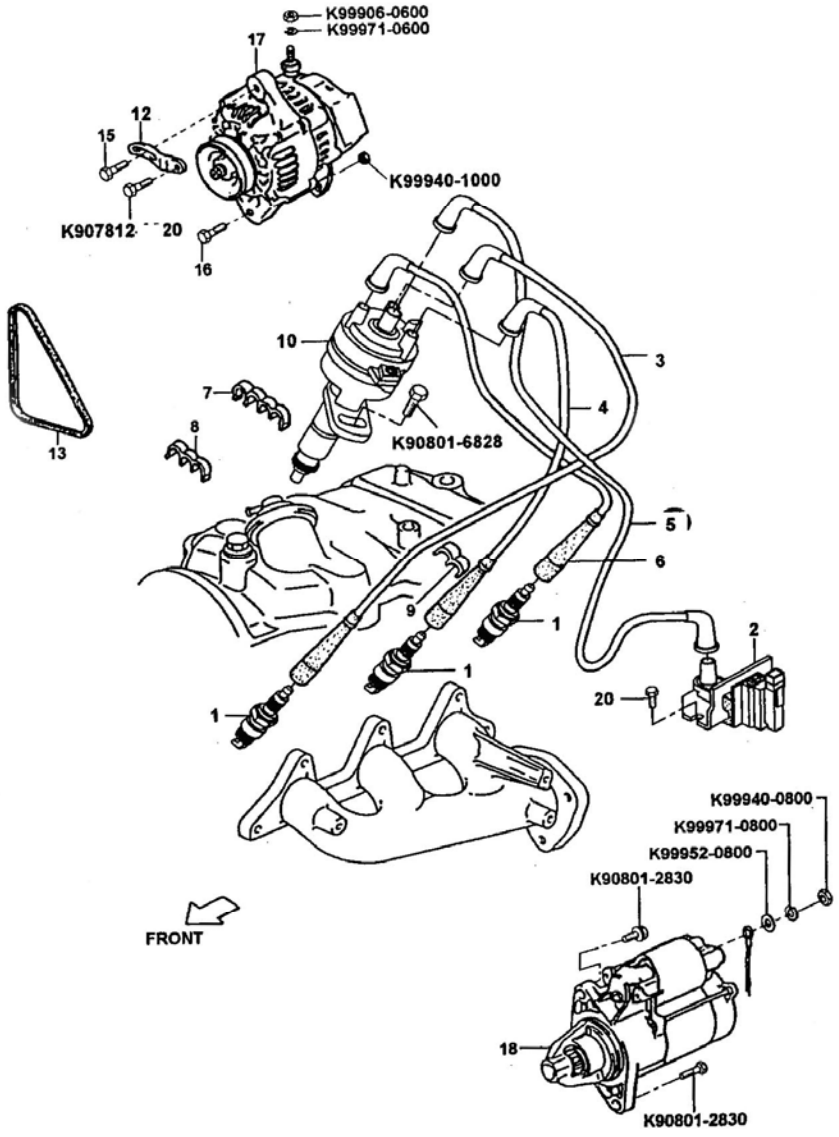

1800A.1 ENGINE ELECTRICAL SYSTEM (MPI)

NO	PARTS NAME	PARTS NUMBER	ALL	TRK	VAN	COH	NOTE
1	SPARK PLUG	AA100-18-110AS	3				OPT
		GW110-18-110	3				
2	IGNITION COIL	GW100-18-100	1				
3	PLUG WIRES (SET)	AA100-CB-151	1				
7	CLAMP	AA100-13-XA5	1				
8	CLAMP	AA100-13-447		1			
9	CLAMP	AA100-18-291	2				
10	DISTRIBUTOR ASM	AW100-18-200	1				
12	ALTERNATOR STRAP	AA100-18-361B	1				
13	“V” BELT	AA16A-18-381A	1				
15	BOLT & WASHER	AA100-18-395B	1				
16	BOLT & WASHER	AA16A-18-391	1				MPI
17	ALTERNATOR ASM	AA111-18-300C	1				12V,50A
		AA16B-18-300	1				12V50A: LPG
18	STARTER ASM	AA101-18-400	1				
19	IGNITION COIL BRACKET	AA16A-18-105	1				LPG
20	BOLT	K90797-6614	2				

1800B ALTERNATOR (MANDO)

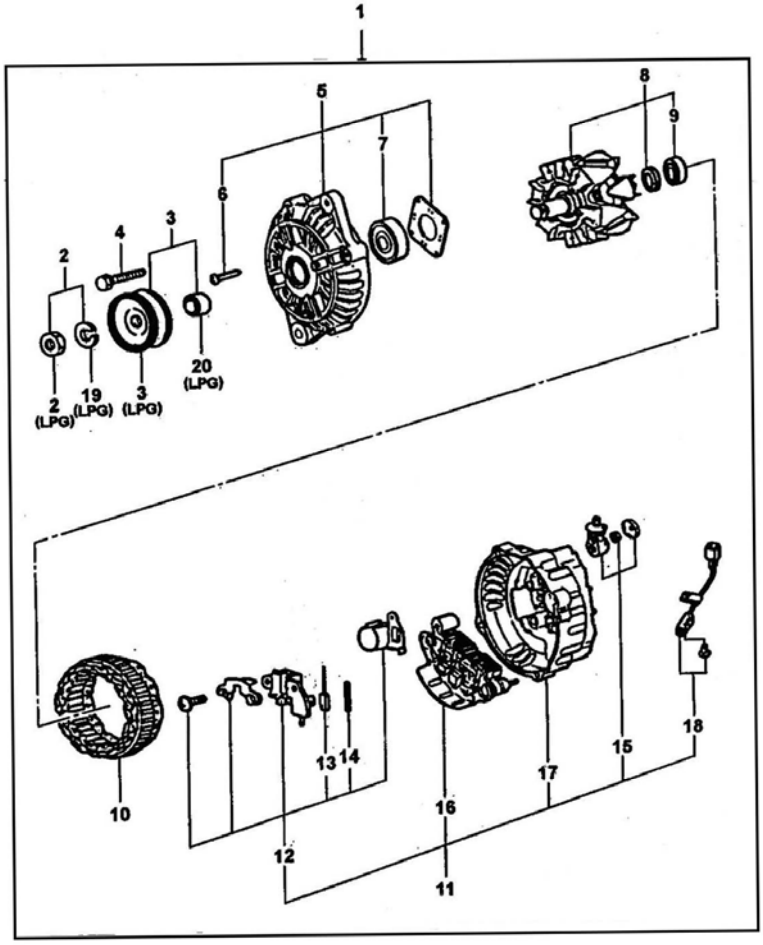

1800B ALTERNATOR (MANDO)

NO	PARTS NAME	PARTS NUMBER	ALL	TRK	VAN	COH	NOTE
1	ALTERNATOR ASM	AA111-18-300C					
		AA16A-18-300A	1				LPG:MPI
2	NUT SET	TA071N00101	1				
	NUT	TS201C00302	1				LPG
3	PULLEY SET	TA074N00101	1				
	PULLEY	TA011C03901	1				LPG
4	BOLT	A904C0301	4				
5	FRONT BRACKET ASM	TA300B04401	1				
6	FLANGE SCREW	A905C0103	4				
		TS062C00302	4				LPG
7	FRONT BEARING	K500811	1				
8	ROTOR ASM	TA200C02701	1				
9	REAR BEARING	K402968	1				
10	STATOR ASM	TA100C02201	1				
11	REAR BRACKET ASM	TA400B052101		1			
		TA400B05501			1	1	
		TA400B13501	1				LPG
12	REGULATOR ASM	A500C0061	1				
13	BRUSH	A933C0602	2				
14	BRUSH SPRING	A934C0107	2				
15	CONNECTOR ASM	TA015C00501	1				
16	RECTIFIER ASM	TA600C03601	1				
17	REAR BRACKET	TA401B04501	1				
		TA401B09801	1				LPG
18	LEAD WIRE ASM	TA929C08001	1				
		A928C08001	1				LPG
19	SPRING WASHER	A903C0101	1				LPG
20	SPACER	A901C0311	1				LPG

1800C ALTERNATOR (DAEWOO)

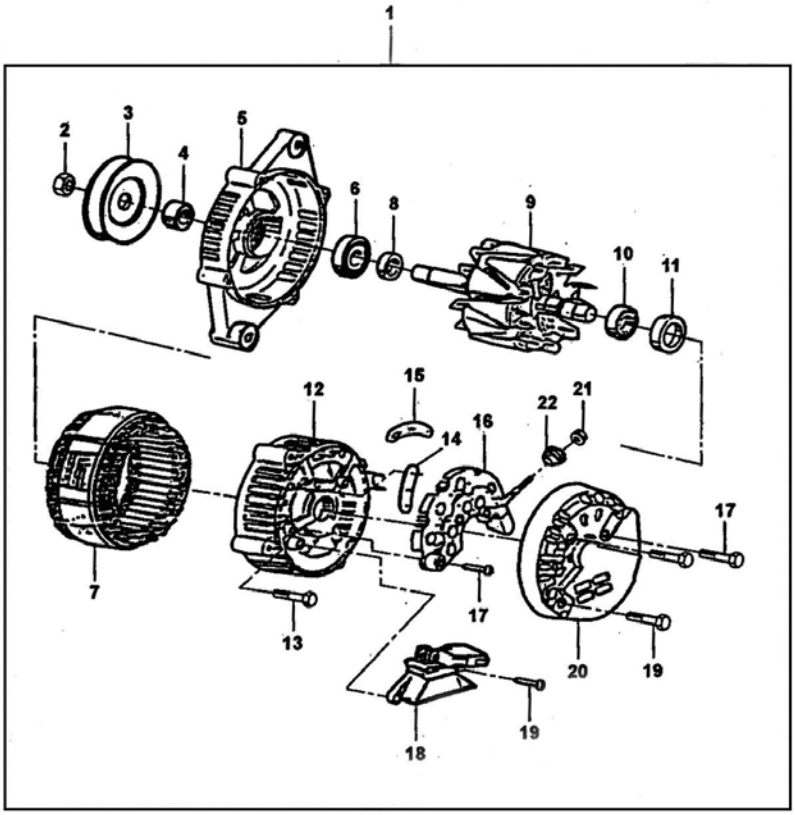

1800C ALTERNATOR (DAEWOO)

NO	PARTS NAME	PARTS NUMBER	ALL	TRK	VAN	COH	NOTE
1	ALTERNATOR AMS	AA110-18-300F	1				
		AA16B-18-300A	1				LPG:MPI
2	NUT	DAB27008	1				
3	PULLEY	DAC28011	1				
4	COLLAR	210250	1				
		210090	1				LPG
5	DRIVE END FRAME	21318	1				
		210594	1				LPG
6	BALL BEARING	DAB21003	1				
		210356	1				LPG
7	STATOR ASM	DAD24003	1				
8	COLLAR	210091	1				
9	ROTOR ASM	210092	1				
10	BALL BEARING	DAB22003	1				
11	RETAINER	DAC22011	1				
12	SLIP RING END DRIVE	210318	1				
		211084	1				LPG
13	BOLT (THROUGH)	10479949	4				
		10473999	4				LPG
14	INSULATOR	DAV28051	1				
15	INSULATOR	DAB28053	1				
16	RECTIFIER AMS	284100	1				
		264300	1				LPG
17	SCREW	DAB27013	3				
18	BRUSH & REGULATOR ASM	210153	1				
19	SCREW & LOCK WASHER	10495298	2				
20	COVER	210106	1				
21	NUT	DAB27011	1				
22	INSULATOR (STUD)	210149	1				

STARTER (MANDO)

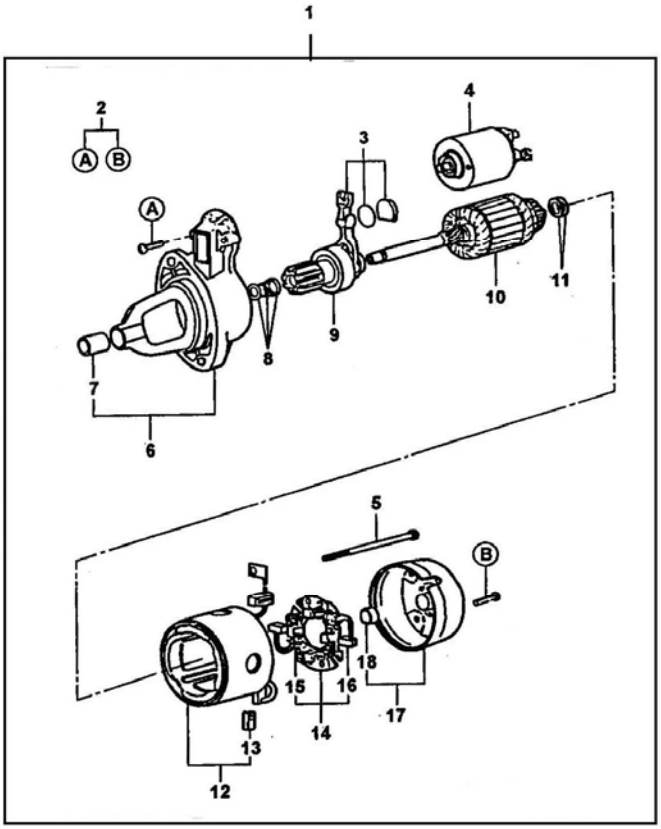

1800D STARTER (MANDO)

NO	PARTS NAME	PARTS NUMBER	ALL	TRK	VAN	COH	NOTE
1	STARTER	AA101-18-400	1				
2	SET SCREW	TM041B00101	1				
3	SET LEVER	TM042N00201	1				
4	MAGNET SWITCH ASM	TM400B02101	1				
5	BOLT (THROUGH)	4EM1780	2				
6	FRONT BRACKET ASM	TM003B03201	1				
7	FRONT SLEEVE	4EM1772	1				
8	SET STOPPER	TM043N00101	1				
9	OVER RUNNING CLUTCH ASM	TM300C01801	1				
10	ARMATURE ASM	TM200B01301	1				
11	WASHER SET	TM044N00101	1				
12	YOKE ASM	TM100C01201	1				
13	BRUSH	TM181C00701	2				
14	BRUSH HOLDER ASM	M500C0082	1				
15	BRUSH SPRING	3EM0854	4				
16	BRUSH	TM581C00901	2				
17	REAR BRACKET	TM009B00701	1				
18	REAR SLEEVE	4EM1774	1				

STARTER (DAEWOO)

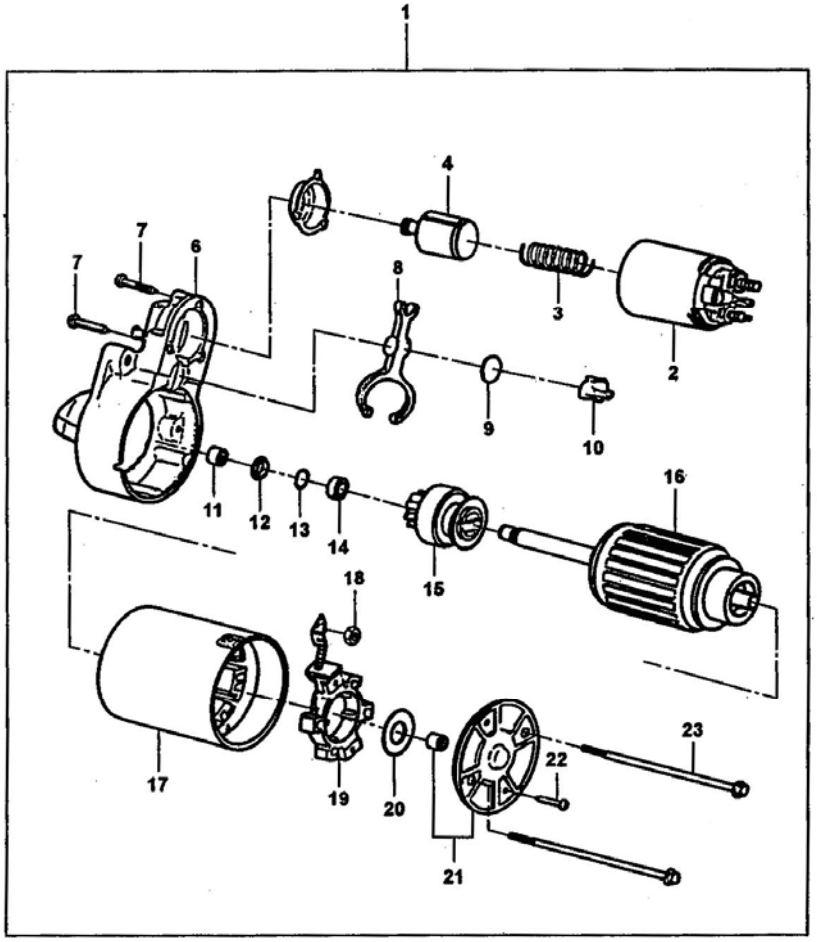

1800E STARTER (DAEWOO)

NO	PARTS NAME	PARTS NUMBER	ALL	TRK	VAN	COH	NOTE
1	STARTER	AA100-18-400A	1				
2	SOLENOID	1114321	1				
3	SPRING	110976	1				
4	PLUNGER ASM	110974	1				
6	HOUSING	10475955	1				
7	SCREW	10475056	1				
8	LEVER	10475062	1				
9	PLATE	10475061	1				
10	PLUG	110725	1				
11	BEARING	10475093	1				
12	COLLAR	10477310	1				
13	RING	1927848	1				
14	STOP	111058	1				
15	DRIVE	10475958	1				
16	ARMATURE	10475538	1				
17	FRAME & FIELD ASM	10475551	1				
18	NUT	110720	1				
19	BRUSH HOLDER ASM	10475107	1				
20	WASHER	10475058	1				
21	CE FRAME ASM	10475545	1				
23	BOLT	10475057	2				

1800F SWITCH & SENSOR (ENGINE)

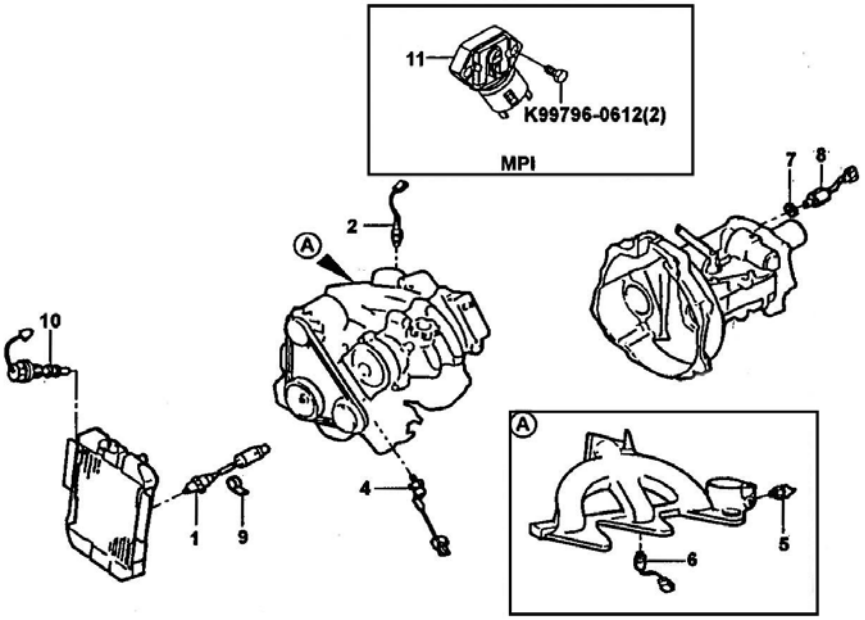

1800F SWITCH & SENSOR (ENGINE)

NO	PARTS NAME	PARTS NUMBER	ALL	TRK	VAN	COH	NOTE
1	RADIATOR WATER TEMP SWITCH	AA101-18-840-PO1	1				
2	WATER TEMP “M” SENSOR	AA100-18-510A	1				
4	OIL PRESSURE SWITCH	AA100-18-501B	1				
5	WATER TEMP EMISSION SWITCH	AA100-18-841					
6	WATER TEMP P.T.C. SWITCH	AA100-18-842	1				
7	WASHER	AA100-26-055	1				
8	BACK-UP LAMP SWITCH	AA100-17-640	1				
9	CLIP	K99276-0506	1				
10	WATER LEVEL SENSOR	AA100-15-610			1	1	
11	MAP SENSOR	EW100-18-211	1				MPI

1800G DISTRIBUTOR

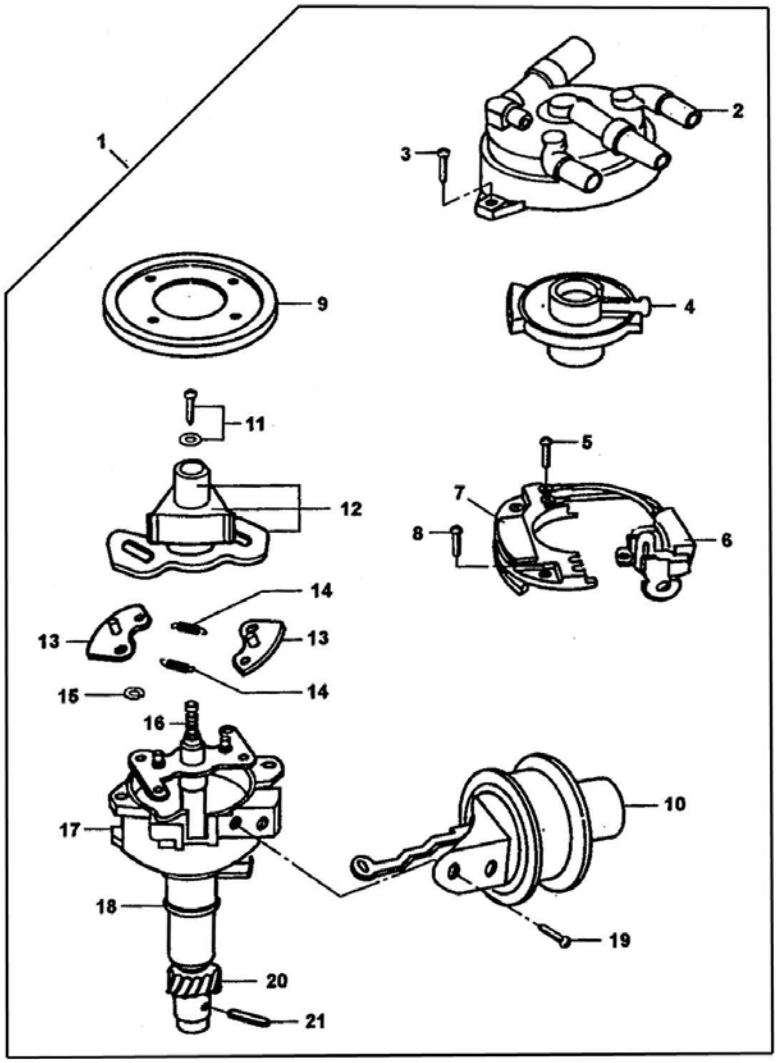

1800G DISTRIBUTOR

NO	PARTS NAME	PARTS NUMBER	ALL	TRK	VAN	COH	NOTE
1	DISTRIBUTOR ASM	AA100-18-200B	1				
2	DISTRIBUTOR CAP	AA100-18-V00	1				
3	SCREW	1972970	2				
4	DISTRIBUTOR ROTOR	AA100-18-V05	1				
5	SCREW	331015	4				
6	PICK UP SET	AA100-18-V15	1				
7	IGNITER	AA100-18-V30	1				
8	SCREW	331033	1				
9	BEARING	331052	1				
10	VACUUM SET	AA100-18-V35	1				
11	SCREW	331056	1				
12	HUB ASM	331060	1				
13	WEIGHT	332061	2				
14	SPRING WEIGHT	332046	2				
15	SNAP RING	331036	2				
16	SHAFT ASM	AA100-18-V06	1				
17	BASE ASM	AA100-18-V61	1				
		AA16A-18-V61	1				LPG
18	“O” RING	AA100-18-201A	1				
19	SCREW	310030	2				
20	HELICAL	AA100-18-273	1				
21	SPRING PIN	AA100-18-V99	1				

KIA METRO

CHASIS

2500 DRIVE SHAFT

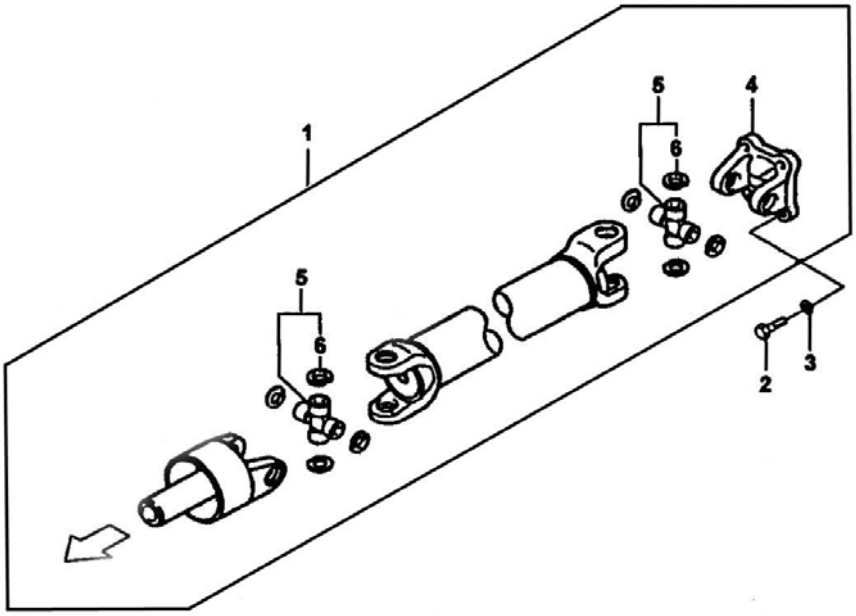

2500 DRIVE SHAFT

NO	PARTS NAME	PARTS NUMBER	ALL	TRK	VAN	COH	NOTE
1	DRIVE SHAFT	AA100-25-100		1			
		AA110-25-100			1	1	
2	BOLT	AA100-25-023	4				
3	SPRING WASHER	D94512-00800	4				
4	FLANGE YOKE	37315-87510	1				
5	UNIVERSAL JOINT	BG010-51-900	2				
6	SNAP RING	BG010-51-971	8				
		BG010-51-972	8				
		BG010-51-973	8				
		BG0010-51-974	8				
		BG010-51-975	8				SEL.USE
		BG010-51-976	8				
		BG010-51-978	8				
		BG010-51-978	8				
		BG010-51-979	8				
	UNIVERSAL JOINT	BG010-51-900	2				

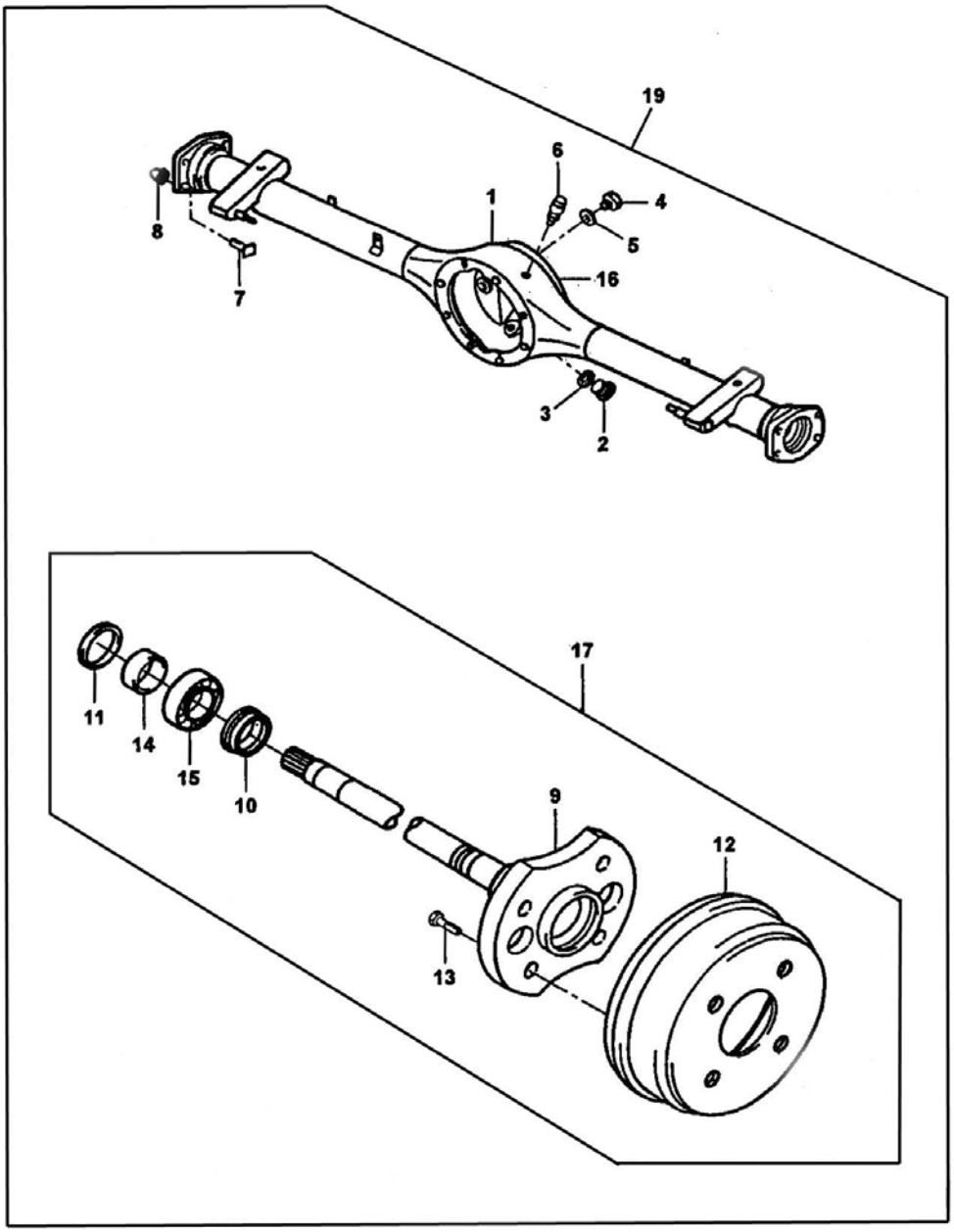
19
6
1
4
8
5
16
7
3
2
17
11
14
15
10
9
12
13

2600A REAR AXLE

NO	PARTS NAME	PARTS NUMBER	ALL	TRK	VAN	COH	NOTE
1	REAR END HOUSING	AA100-26-020A		1			F.G.R. 5.375
		AA110-26-020A			1	1	F.G.R. 5.375
2	DRAIN PLUG (MAGNETIC)	AA100-26-051A	1				
3	WASHER	K99564-1600	1				
4	PLUG	AA100-26-054	1				
5	GASKET	AA100-26-056	1				
6	BREATHER	AA100-17-530	1				
7	BACK PLATE BOLT	AA100-26-301A	8				
8	LOCK NUT	AA100-26-305A	8				
9	REAR AXLE SHAFT	AA100-26-111	2				
10	BEARING SPACER	AA100-26-155	2				
11	AXLE OIL SEAL	AA100-26-157	2				
12	BRAKE DRUM	AA100-26-251A	2				
13	WHEEL STUD	AA100-26-113	8				
14	COLLAR	AA100-26-152	2				
15	REAR AXLE BEARING	AA100-26-151	2				
16	CASING COVER	AA100-26-790A	1				
17	REAR AXLE RH SHAFT ASM	AA100-26-110B		1			
		AA110-26-110B			1	1	
	REAR AXLE LH SHAFT ASM	AA100-26-120B		1			
		AA110-26-120B			1	1	
19	REAR AXLE COMPLETE	AA100-05-001B		1			F.G.R. 5.375
		AAW00-05-001A		1			EXPORT: GAS F.G.R. 5.375
		AAW11-05-001B			1	1	EXPORT: GAS F.G.R. 5.125 OPT
		AA131-05-001B			1	1	F.G.R. 5.375
		AW11-05-001-J13			1	1	TROPIC EXPORT

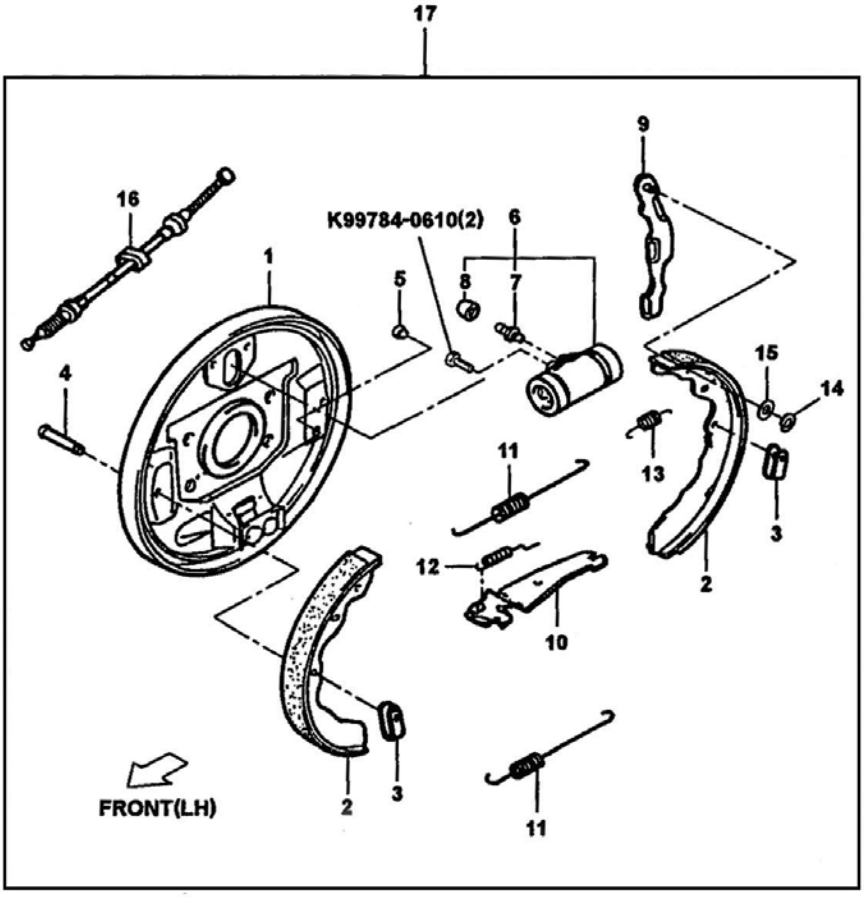
17
16
K99784-0610(2)
6
9
1
5
8
7
15
14
4
11
13
3
12
2
10
FRONT(LH)
2
3
11

2600B REAR BRAKE

NO	PARTS NAME	PARTS NUMBER	ALL	TRK	VAN	COH	NOTE
1	BRAKE RH PLATE ASM	BG010-13-280	1				
	BRAKE LH PLATE ASM	BG010-13-290	1				
2	REAR BRAKE SHOE ASM	AA100-CC-310	4				
3	SHOE HOLD SPRING RH	AC011-13-345	2				
	SHOE HOLD SPRING LH	AC011-13-355	2				
4	SHOE HOLD PIN RH	1243-44-591	4				
5	HOLE PLUG	AB030-13-289	2				
6	WHEEL CYLINDER RH	AA100-26-610	1				
	WHEEL CYLINDER LH	AA100-26-710	1				
7	BLEEDER SCREW	0259-33-691	1				
8	BLEEDER SCREW CAP	AB021-04-693	1				
9	PARKING LEVER ASM RH	AC022-13-800	1				
	PARKING LEVER ASM LH	AC022-13-810	1				
10	PARKING BRAKE STRUT ASM RH	BG010-13-651	1				
	PARKING BRAKE STRUT ASM LH	BG010-13-661	1				
11	RETRUN SPRING	AC011-13-341	4				
12	ADJUSTER SPRING	AC011-13-655	2				
13	ANTI-RATTLE SPRING	AC011-13-347	2				
14	SNAP RING	K99575-0600	2				
15	WAVE WASHER	AF020-14-535	2				
16	PARKING BRAKE CABLE RH	AA100-44-410C		1			
		AA110-44-410B			1	1	
	PARKING BRAKE CABLE LH	AA100-44-420C		1			
		AA110-44-420B			1	1	
17	REAR BRAKE ASM RH	AA100-26-980D		1			
		AA110-26-980C			1	1	

2600B REAR BRAKE

NO	PARTS NAME	PARTS NUMBER	ALL	TRK	VAN	COH	NOTE
17	REAR BRAKE ASM LH	AA100-26-990D		1			
		AA110-26-990C			1	1	

2700 REAR DIFFERENTIAL

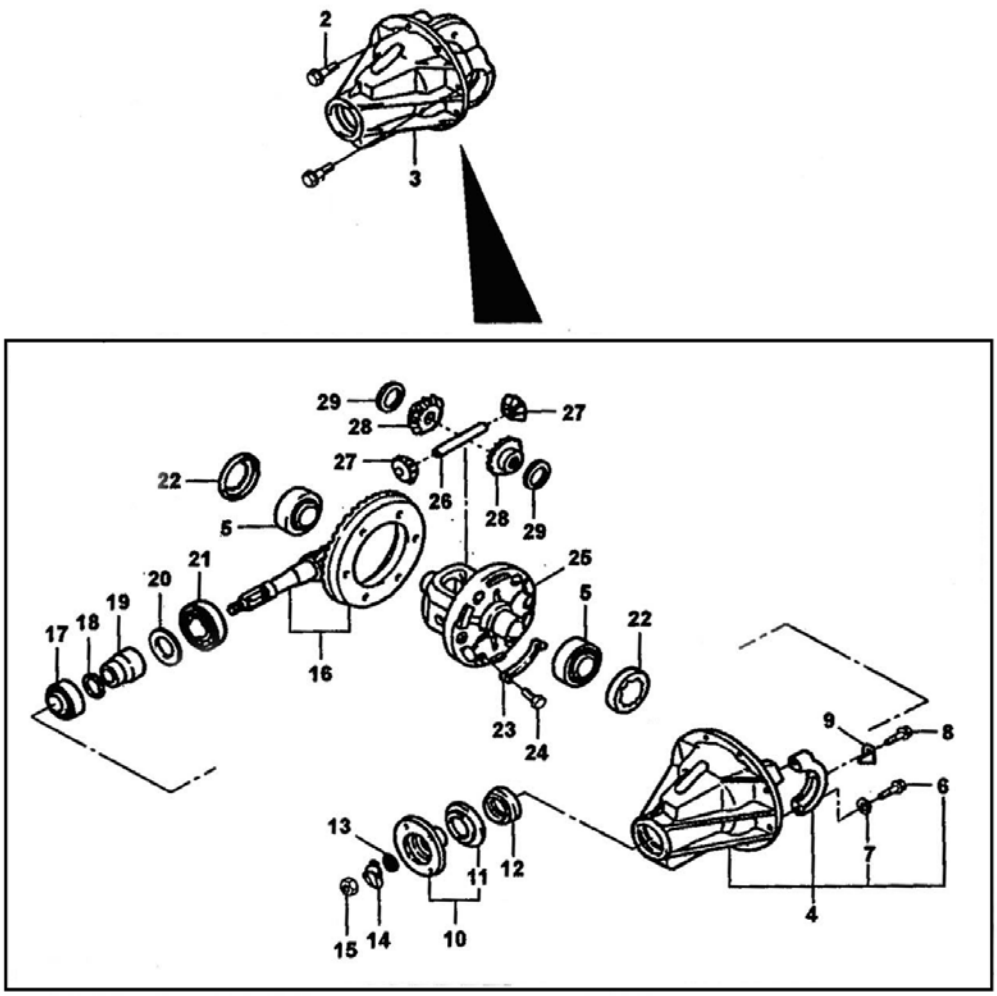

2700 REAR DIFFERENTIAL

NO	PARTS NAME	PARTS NUMBER	ALL	TRK	VAN	COH	NOTE
1	BOLT SET	AA100-26-048	6				
2	BOLT SET	AA100-26-049	6				
3	DRIVING & DIFFERENTIAL	AA100-27-100D	1				F.D.R.:5.375
4	DIFFERENTIAL CARRIER SUB ASM	AA100-27-150A	1				
5	SIDE BEARING	AA100-27-350	2				
6	BOLT	AA100-27-153	4				
7	SPRING WASHER	D94511-01000	4				
8	BOLT & WASHER	D91651-40614	2				
9	LOCK PLATE	AA100-27-302	2				T=2.3
10	COMPANION FLANGE ASM	AA100-27-120A	1				
11	DUST COVER	AA100-27-122	1				
12	OIL SEAL	AA100-27-165A	1				
13	DRIVE PINION WASHER	AA100-27-012	1				
14	LOCK WASHER	AA100-27-014	1				
15	LOCK NUT	AA100-27-031	1				
16	DIFFERENTIAL FINAL GEAR SET	AA100-27-110C	1				F.G.R.: 5.375
17	OUTER PINION BEARING	AA100-27-220	1				
18	SHIM	AA100-27-155	A/R				T=0.25
		AA100-27-156	A/R				T=0.30
		AA100-27-157	A/R				T-0.40
		AA100-27-158	A/R				T=0.50
19	DISTANCE PIECE	AA100-27-171A	1				
20	PINION DRIVE SHIM	AA100-27-401	A/R				T=0.15
		AA100-27-402	A/R				T=0.20
		AA100-27-403	A/R				T=0.25
		AA100-27-404A	A/R				T=0.30
21	PINION INNER BEARING	AA100-27-210	1				
22	ADJUST SCREW	AA110-27-301	2				
23	PLATE	AA100-27-237	3				
24	BOLT	AA100-27-235	6				
25	DIFFERENTIAL GEAR CASE	AA100-27-231	1				
26	DIFFERENTIAL PINION SHAFT	AA100-27-261	1				

NO	PARTS NAME	PARTS NUMBER	ALL	TRK	VAN	COH	NOTE
27	DIFFERENTIAL PINION	AA100-27-255	2				
28	DIFFERENTIAL SIDE GEAR	AA100-27-251	2				
29	THRUST WASHER	AA100-27-252	2				T=0.8 A/R
		AA100-27-253	2				T=0.9 A/R
		AA100-27-254	2				T=1.0 A/R

2800 REAR SUSPENSION

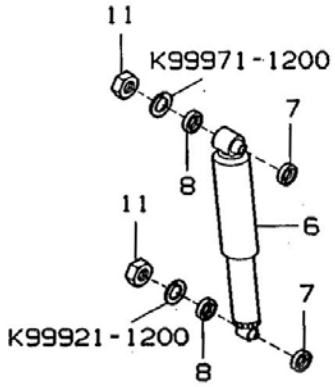

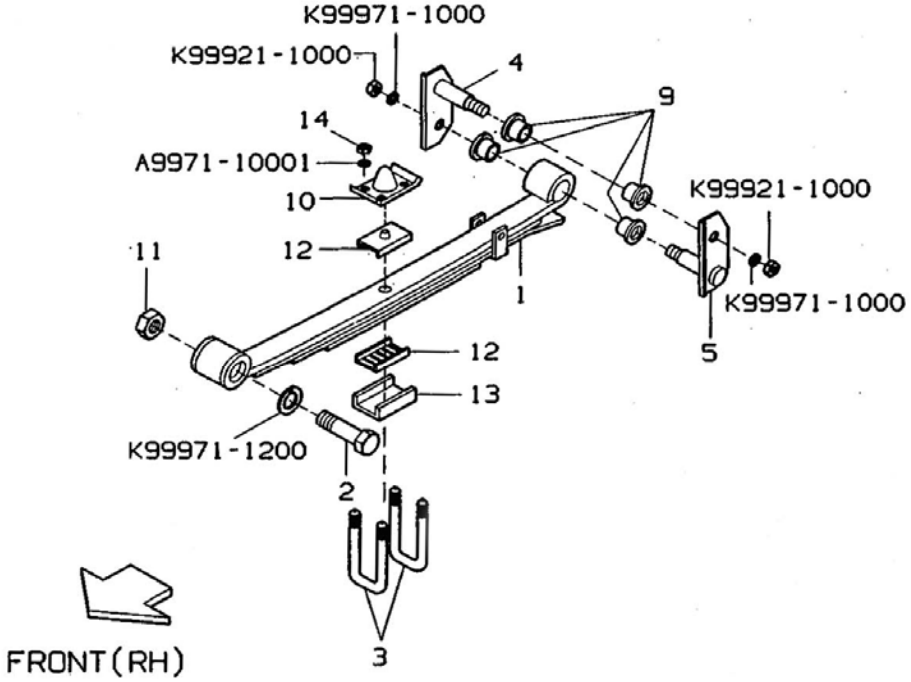

2800 REAR SUSPENSION

NO	PARTS NAME	PARTS NUMBER	ALL	TRK	VAN	COH	NOTE
1	REAR SPRING ASM	AA100-28-010A		2			
		AA110-28-010B			2	2	
2	SPRING PIN	AA100-28-111	2				
3	"U" BOLT	AA100-28-161A		4			
		AA110-28-161A			4	4	
5	SHACKEL ASM	AA100-28-140A	4				
6	SHOCK ABSORBER	AA100-28-700D		2			
		AA110-28-700E			2	2	
7	WASHER	KK620-28-783	4				
8	WASHER	00710-28-783	4				
9	BUSHING	AA100-28-775	8				
10	RUBBER BUMPER	AA100-28-320		2			
		AA110-28-320A			2		
		AA112-28-320B				2	
11	NUT	D94115-41200	6				
12	SPRING PAD	AA110-28-181			4	4	
13	SPRING PAD RETAINER	AA110-28-183			2	2	
14	NUT	1368-25-124	8				

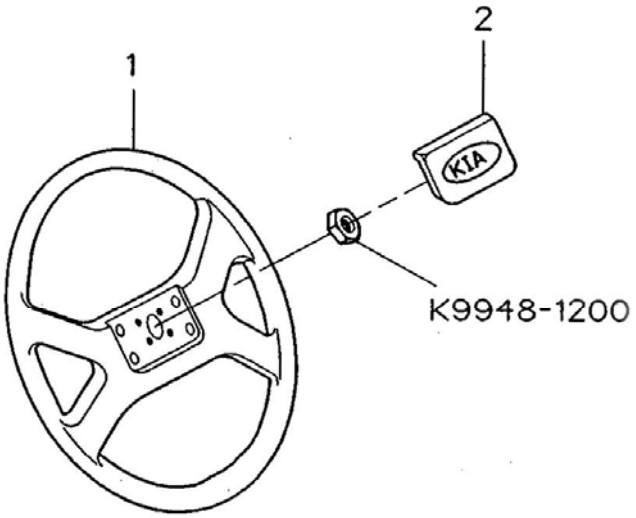
1
2
KIA
K9948-1200

3200A STEERING WHEEL

NO	PARTS NAME	PARTS NUMBER	ALL	TRK	VAN	COH	NOTE
1	STEERING WHEEL	AA100-32-010	1				
2	HORN CAP	AA100-32-800B	1				

3200B STEERING COLUMN & SHAFT

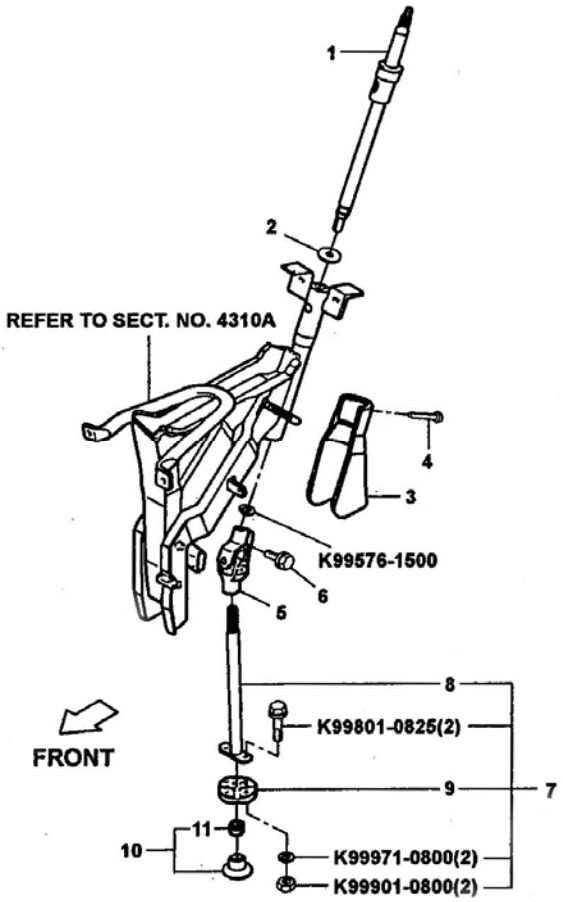

3200B STEERING COLUMN & SHAFT

NO	PARTS NAME	PARTS NUMBER	ALL	TRK	VAN	COH	NOTE
1	MAIN STEERING SHAFT SUB ASM	AA100-32-100A	1				
2	WASHER	AA100-32-366	1				
3	MAIN SHAFT JOINT COVER	AA100-32-640A	1				
4	SCREW	AA100-32-630	1				
5	UNIVERSAL JOINT	MB210-32-850A	1				
6	BOLT & WASHER	AA100-32-365	2				
7	INTERMEDIATE SHAFT	AA100-32-090B	1				
8	INTERMEDIATE SHAFT SUB ASM	AA100-32-091	1				
9	INTERMEDIATE COUPLING ASM	AA100-32-094	1				
10	DUST COVER SUB ASM	AA100-32-650	1				
11	BUSHING	AA100-32-652	1				

3200C STEERING GEAR

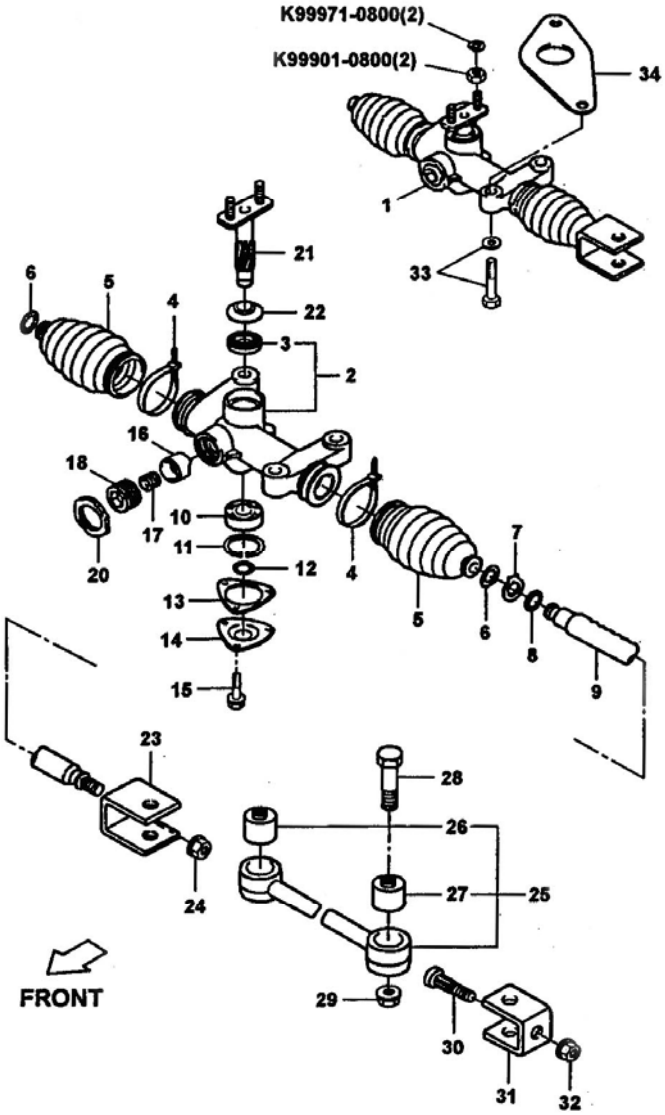

3200C STEERING GEAR (PINION)

NO	PARTS NAME	PARTS NUMBER	ALL	TRK	VAN	COH	NOTE
1	STEERING RACK	AA100-32-110	1				
		AA110-32-110	1				TRW-MANDO
2	RACK HOUSING SUB ASM	AA100-32-120	1				
3	OIL SEAL "K" TYPE	AA100-32-126	1				
4	STEERING RACK BOOT BAND	AA100-32-127	2				
5	STEERING RACK BOOT	AA100-32-125	2				
6	RACK BOOT NO.1 BAND	AA100-32-128	2				
7	SHAFT SNAP RING	AA100-32-175	1				
8	PLATE WASHER	AA100-32-172	1				
9	STEERING RACK	AA100-32-119	1				
10	RADIAL BALL BEARING	AA100-32-173	1				
11	SNAP RING	D96151-03500	1				
12	SHAFT SNAP RING	AA100-32-174	1				
13	LINK HOUSING PACKING	AA100-32-964	1				
14	GEAR HOUSING COVER	AA100-32-117	1				
15	BOLT & WASHER	D91611-60612	3				
16	RACK GUIDE	AA100-32-111	1				
17	COMPRESSION SPRING	AA100-32-113	1				
18	RACK GUIDE SPRING CAP	AA100-32-129	1				
20	NUT (HEX)	AA100-32-131	1				
21	STEERING PINION ASM	AA100-32-130	1				
22	DUST COVER	AA100-32-112	1				
23	DRAG LINK END NO.1	AA100-32-166	1				
24	LOCK NUT	AA100-32-171	1				
25	DRAG LINK SUB ASM	AA100-32-160A	1				
26	BUSHING	AA100-32-162	1				
27	BUSHING	AA100-32-163	1				
28	BOLT (HEX)	AA100-32-169	2				

3200C STEERING GEAR (PINION)

NO	PARTS NAME	PARTS NUMBER	ALL	TRK	VAN	COH	NOTE
29	LOCK NUT	D94184-01401	2				
30	DRAG LINK BOLT SET	AA100-32-168	1				
31	DRAG LINK NO.2 END	AA100-32-167	1				
32	LOCK NUT	AA100-32-364	1				
33	BOLT & WASHER	AA100-32-363	3				
34	GEAR HOUSING COVER	AA100-32-170	1				

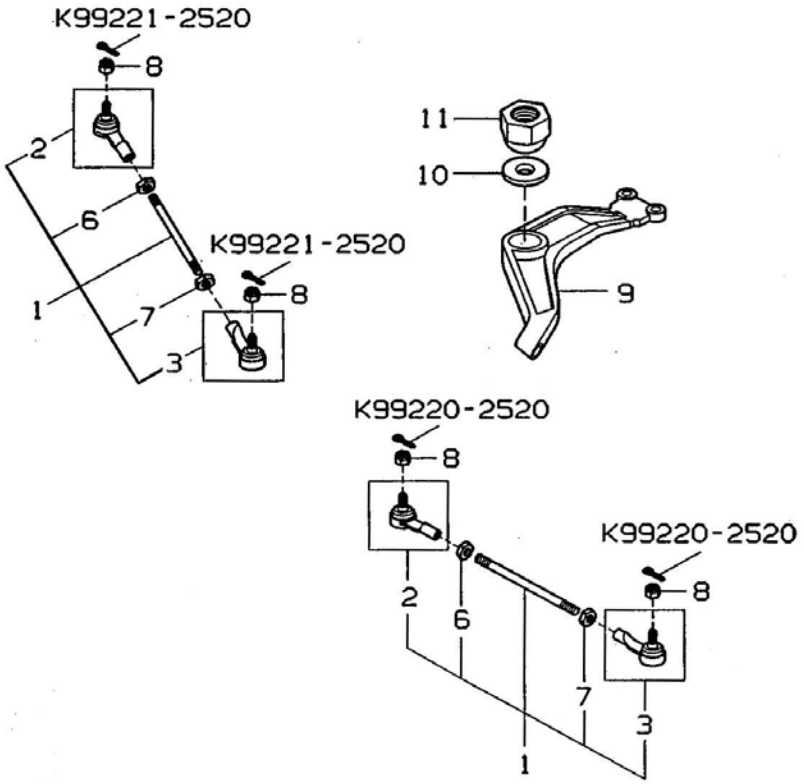
K99221-2520
8
2
6
1
7
3
K99221-2520
8
11
10
9
K99220-2520
8
2
6
1
7
3
K99220-2520
8

3200D STEERING LINKAGE

NO	PARTS NAME	PARTS NUMBER	ALL	TRK	VAN	COH	NOTE
1	TIE ROD ASM	AA100-32-270	2				
		AA161-32-270	2				LPG
2	TIE ROD NO.1 END SUB ASM	AA100-32-280	2				
		AA161-32-280	2				LPG
3	TIE ROD NO.2 END SUB ASM	AA100-32-240	2				
6	NUT	AA100-32-289	2				
7	NUT	AA100-32-288	2				
8	NUT CASTLE	AA100-32-360A	4				
9	CENTER ARM SUB ASM	AA100-32-350	1				
10	NUT	AA100-32-361A	1				
11	WASHER	AA100-32-362	1				

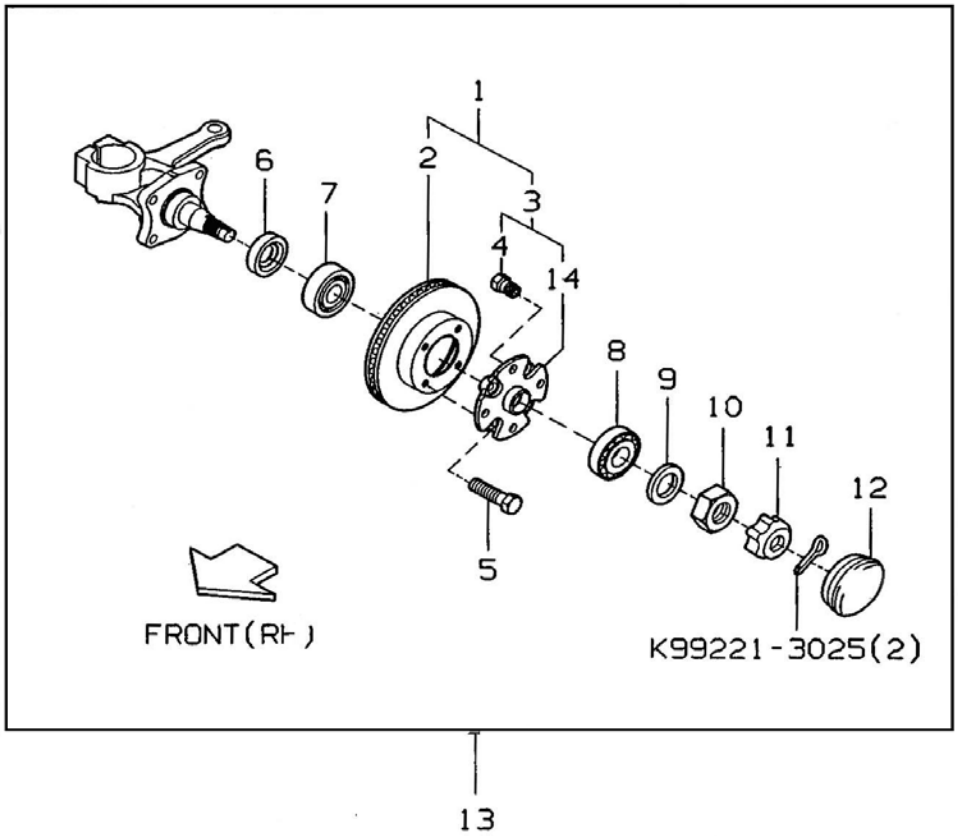
1
2
3
4
14
6
7
8
9
10
11
12
5
13
FRONT(RH)
K99221-3025(2)

3300A FRONT AXLE

NO	PARTS NAME	PARTS NUMBER	ALL	TRK	VAN	COH	NOTE
1	FRONT AXLE HUB & DISC ASM	AA100-04-090D	2				
2	FRONT DISC	AA100-33-251A	2				
3	FRONT ALCE HUB SUB ASM	AA100-32-090D	2				
4	HUB BOLT	AA100-33-114A	8				
5	BOLT & WASHER	AA100-33-198	8				
6	OIL SEAL "T" TYPE	AA100-33-067	2				
7	INNER BEARING	AA100-33-047	2				
8	OUTER BEARING	AA100-33-075	2				
9	CLAW WASHER	AA100-33-043	2				
10	NUT	AA100-33-042	2				
11	WHEEL ADJUST LOCK CAP	AA100-33-049	2				
12	FRONT HUB GREASE CAP	AA100-33-071	2				
13	FRONT RH AXLE ASM	AA110-04-002G	1				
14	FRONT AXLE HUB	AA100-33-061C	2				

3300B FRONT BRAKE CALIPER

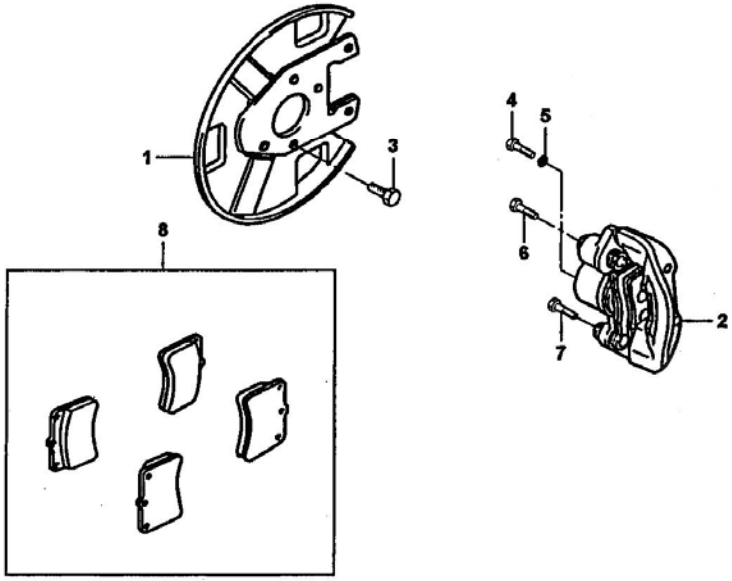

3300B FRONT BRAKE CALIPER

NO	PARTS NAME	PARTS NUMBER	ALL	TRK	VAN	COH	NOTE
1	RH DUST COVER	AA100-33-260	1				
	LH DUST COVER	AA100-33-270	1				
2	CALIPER RH	AA100-33-980 (47720-57-509)	1				
	CALIPER LH	AA100-33-990 (47710-57-509)	1				
3	BOLT & WASHER	AA100-33-305	4				
4	BOLT	AA100-43-694	2				
5	GASKET	K99562-1000	4				
6	BOLT	AA100-33-302	2				
7	BOLT	AA100-33-303	2				
8	BRAKE PAD	AA100-33-625 (KOBM-13-328Z)	1				

3400 FRONT SUSPENSION MECHANISMS

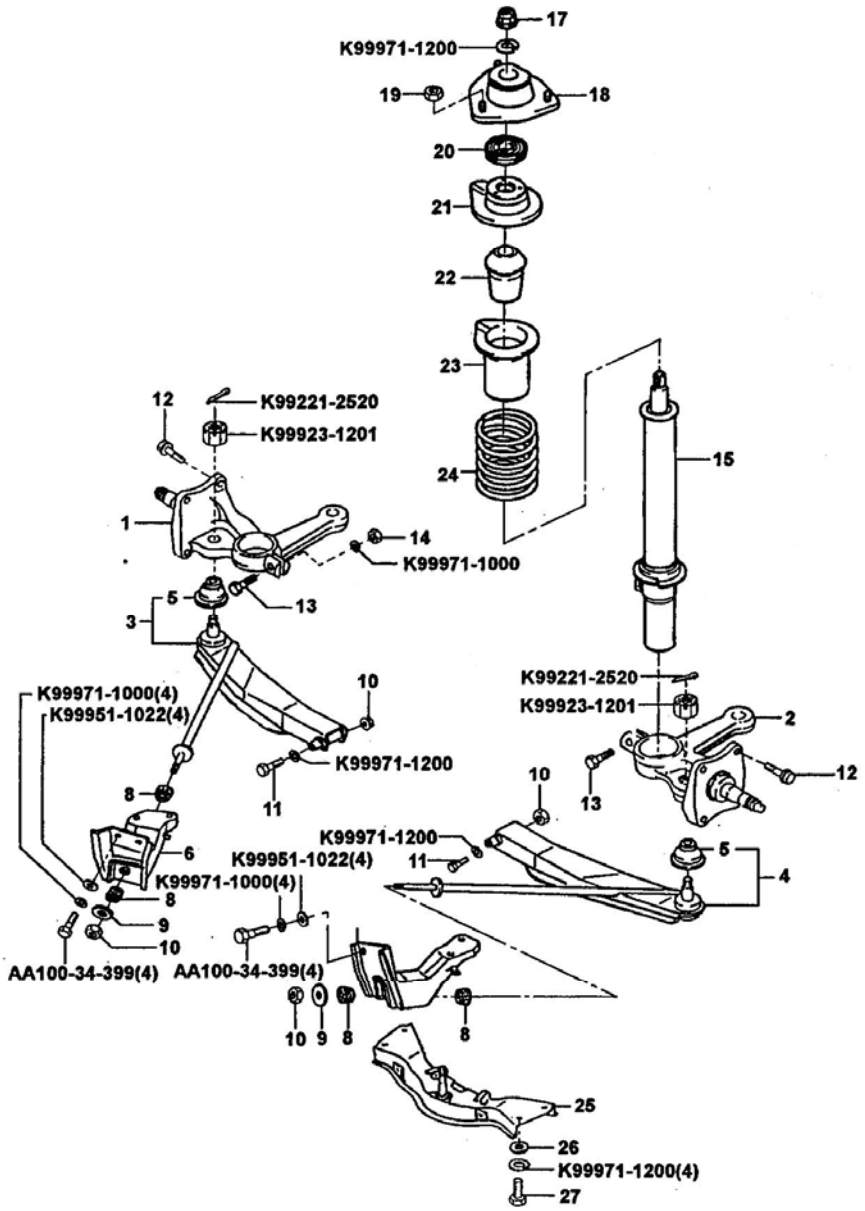

3400 FRONT SUSPENSION MECHANISMS

NO	PARTS NAME	PARTS NUMBER	ALL	TRK	VAN	COH	NOTE
1	STEERING KNUCKLE RH	AA100-33-021	1				
2	STEERING KNUCKLE LH	AA100-33-031	1				
3	LOWER ARM SUB ASM RH	AA100-34-300	1				
4	LOWER ARM SUB ASM LH	AA100-34-350	1				
5	DUST COVER	AA100-34-535	2				
6	STRUT BRACKET ASM RH	AA100-34-730B	1				
7	STRUT BRACKET ASM LH	AA100-34-740B	1				
8	STRUT BAR CUSHION	AA100-34-136	4				
9	WASHER	AA100-34-137	2				
10	LOCK NUT	AA100-34-397A	4				
11	LOWER ARM PIN	AA100-34-430	2				
12	BOLT & WASHER	AA100-33-680	8				
13	BOLT (FLANGE)	AA100-33-305	2				
14	NUT	AA100-33-306	2				
15	FRONT SHOCK ABSOBER RH	AA100-34-700C	1				
16	SUSPENSION SUPPORT ASM	AA100-34-390A	2				
17	LOCK NUT	AA100-34-397	2				
18	FRONT SHOCK ABSOBER LH	AA100-34-900C	1				
19	LOCK NUT	AA100-34-398A	6				
20	BUSHING	AA100-34-381A	2				
21	SPRING UPPER SEAT	AA100-34-340	2				
22	FRONT SPRING BUMPER	AA100-34-111	2				
23	SHOCK ABSORBER DUST COVER	AA100-34-015	2				
24	FRONT COIL SPRING	AA100-34-011		2			
		AA110-34-011			2	2	
25	SUSPENSION CROSS MEMBER ASM	AA100-34-800C	1				

3400 FRONT SUSPENSION MECHANISMS

NO	PARTS NAME	PARTS NUMBER	ALL	TRK	VAN	COH	NOTE
26	WASHER	AA100-34-895	4				
27	BOLT	AA100-34-897A	4				

3700A TIRE & WHEEL

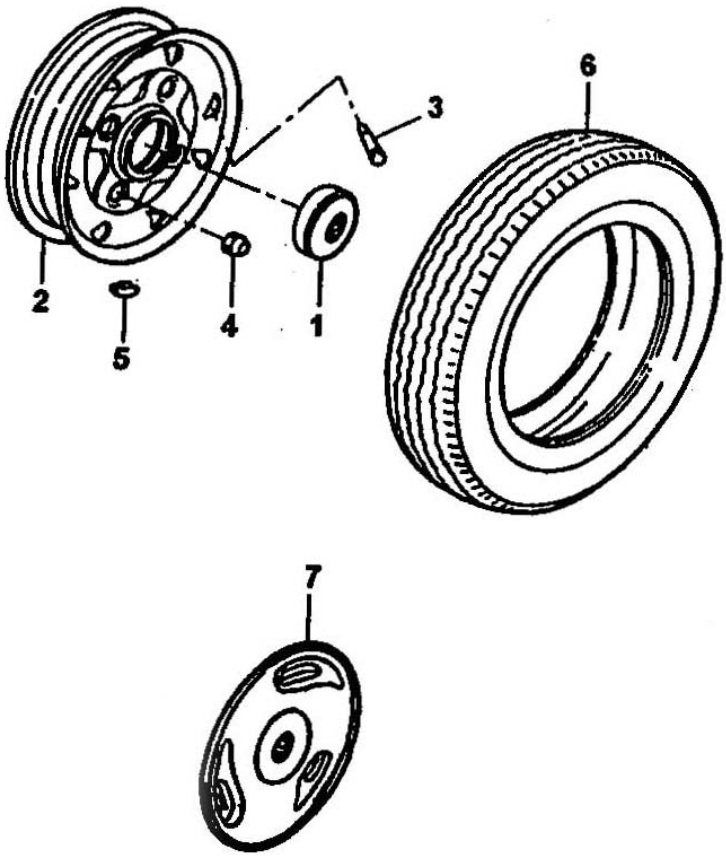

3700A TIRE & WHEEL

NO	PARTS NAME	PARTS NUMBER	ALL	TRK	VAN	COH	NOTE
1	CENTER CAP	AA100-37-190C	4				
	CENTER EMBLEM	AA114-37-290B				4	W/ ALUM.
2	WHEEL	AA100-37-840	5				
	ALUMINUM WHEEL	AA114-37-940C				5	OPT
3	VALVE	K99636-04130	5				
4	WHEEL NUT	AA100-37-161A	16				STEEL DISC
		KB002-37-160				16	ALUM DISC
5	BALANCE WEIGHT						
6	TIRE	AA100-37-810A		5			5.00-12-8PR
		AA101-37-810A		5			5.00-12-8PR
		AA102-37-810A		5			5.00-12-8PR
		AA114-37-810A	5				155R-12-6PR
		AA115-37-810A	5				155R-12-6PR
		AA112-37-810A	5				155R-12-6PR
		AA116-37-810				5	165/70R 12
		AA117-37-810				5	165/70R 12
7	HUB CAP	AA113-37-170C			4	4	

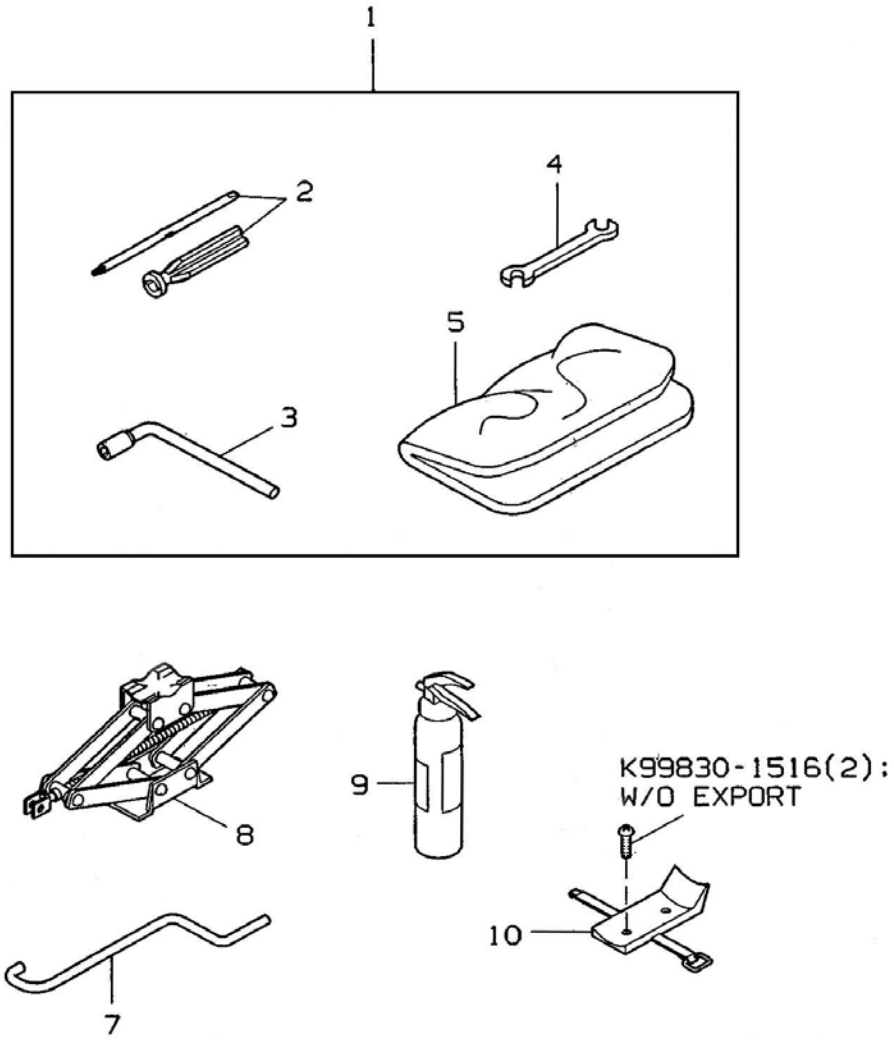
1
2
3
4
5
8
9
K99830-1516(2):
W/O EXPORT
10
7

3700B SERVICE TOOLS

NO	PARTS NAME	PARTS NUMBER	ALL	TRK	VAN	COH	NOTE
1	TOOL ASM	AA100-37-650B	1				
2	SCREW DRIVER	AA100-68-110	1				
3	LUG NUT WRENCH	AA100-69-070	1				
4	SPANNER	AA100-68-062A	1				
5	TOOL BAG	AA100-69-670A	1				
7	JACK LEVER	AA100-37-781	1				
8	JACK	AA100-37-790	1				
9	FIRE EXTINGUISHER	AA114-68-720				1	W/O EXPORT
10	EXTINGUISHER BRACKET	AA114-54-790				1	W/O EXPORT

3900 ENGINE & TRANSMISSION MOUNTING

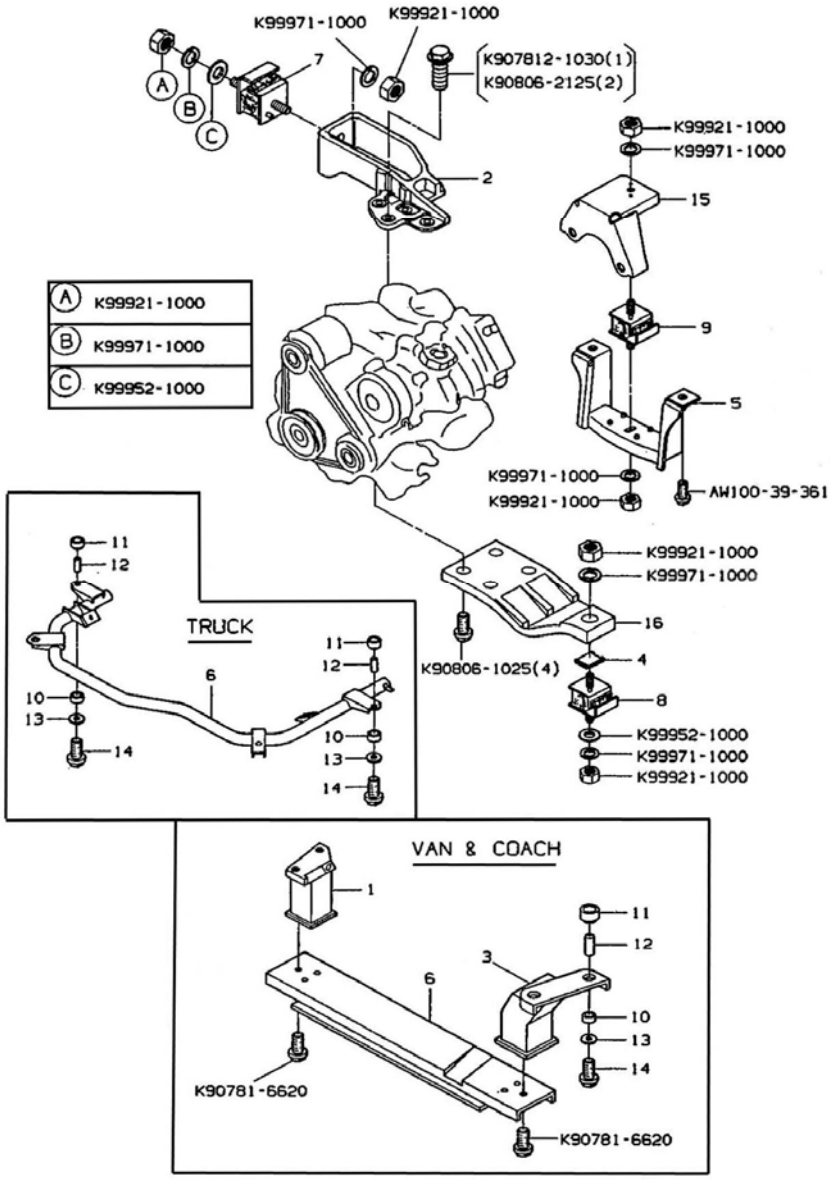

3900 ENGINE & TRANSMISSION MOUNTING

NO	PARTS NAME	PARTS NUMBER	ALL	TRK	VAN	COH	NOTE
1	ENGINE MOUNTING BRACKET RH	AA110-39-080C			1	1	
2	ENGINE MOUNTING BRACKET RH	AA100-39-020B	1				
3	ENGINE MOUNTING BRACKET LH	AA110-39-090A			1	1	
4	ENGINE MOUNTING HEAT INSULATOR	AA100-39-051	1				
5	T/M MOUNTING BRACKET ASM	AA100-39-360	1				
		AW100-39-360	1				MPI
6	ENGINE MOUNTING MEMBER	AA16A-39-800F		1			LPG
		AA110-39-800G			1	1	
7	ENGINE MOUNTING RUBBER RH	AA100-39-040	1				
8	ENGINE MOUNTING RUBBER LH	AA100-39-050	1				
9	T/M MOUNTING RUBBER	AA100-39-340	1				
10	INSULATOR	AA100-39-811	4				
11	INSULATOR	AA100-39-812	4				
		AW100-39-812	4				MPI
12	SPACER	AA100-39-801	4				
13	WASHER	AA100-39-803	4				
14	BOLT	K907812-1075	4				
15	T/M MOUNTING BRACKET	AA100-39-331	1				
16	ENGINE MOUNTING BRACKET LH	AA16A-39-030	1				LPG, MPI

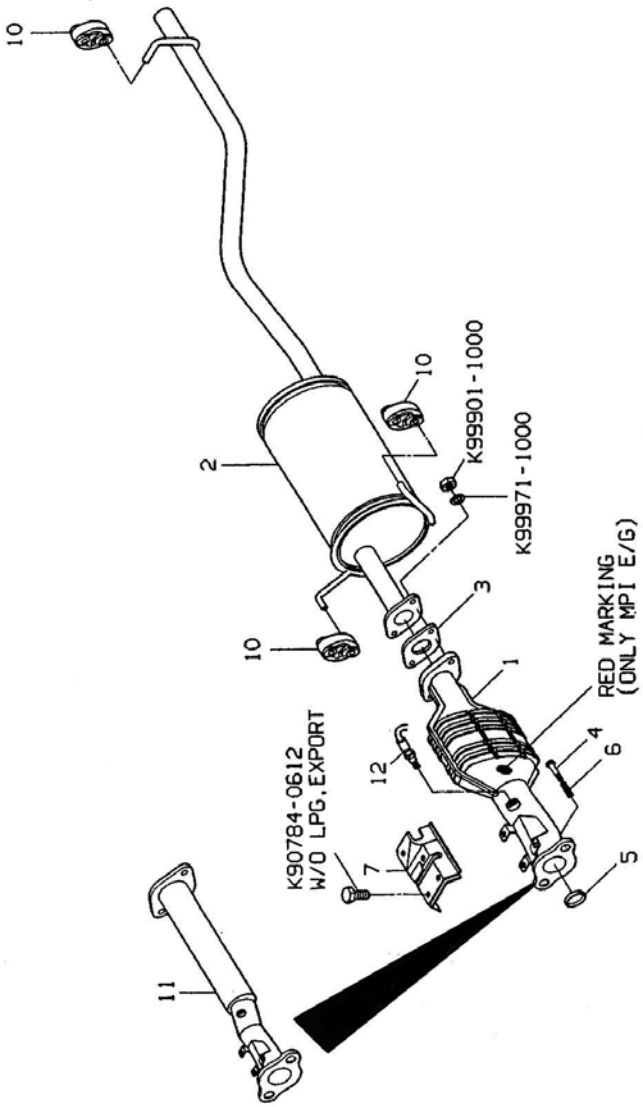
10
2
10
K99901-1000
K99971-1000
3
10
1
RED MARKING
(ONLY MPI E/G)
12
4
6
K90784-0612
W/O LPG, EXPORT
7
5
11

4000A EXHAUST SYSEMT (TRUCK)

NO	PARTS NAME	PARTS NUMBER	ALL	TRK	VAN	COH	NOTE
1	CATALYST COVERTER ASM	AA100-20-600F		1			
		AA16A-200-600C		1			LPG
		AW100-20-600A		1			MPI
		AAW00-20-600J12		1			EXPORT
2	MUFFLER	AA100-40-100G		1			
3	GASKET	AA100-40-305		1			
4	BOLT	AA100-40-354		2			
5	SEAL RING	UA110-40-581		1			
6	EXHAUST PIPE SPRING	AA100-40-582		2			
7	PROTECTOR NO.1	AA100-40-831A		1			W/O LPG EXP
10	RUBBER HANGER	AA100-40-061		3			
11	FRONT PIPE ASM	AA100-40-500CP01		1			EXP, LEADED ONLY
12	OXYGEN SENSOR	AA100-18-861		1			
		AA16A-18-860		1			LPG
		EW100-18-861		1			MPI

4000B EXHAUST SYSEMT (VAN-COACH)

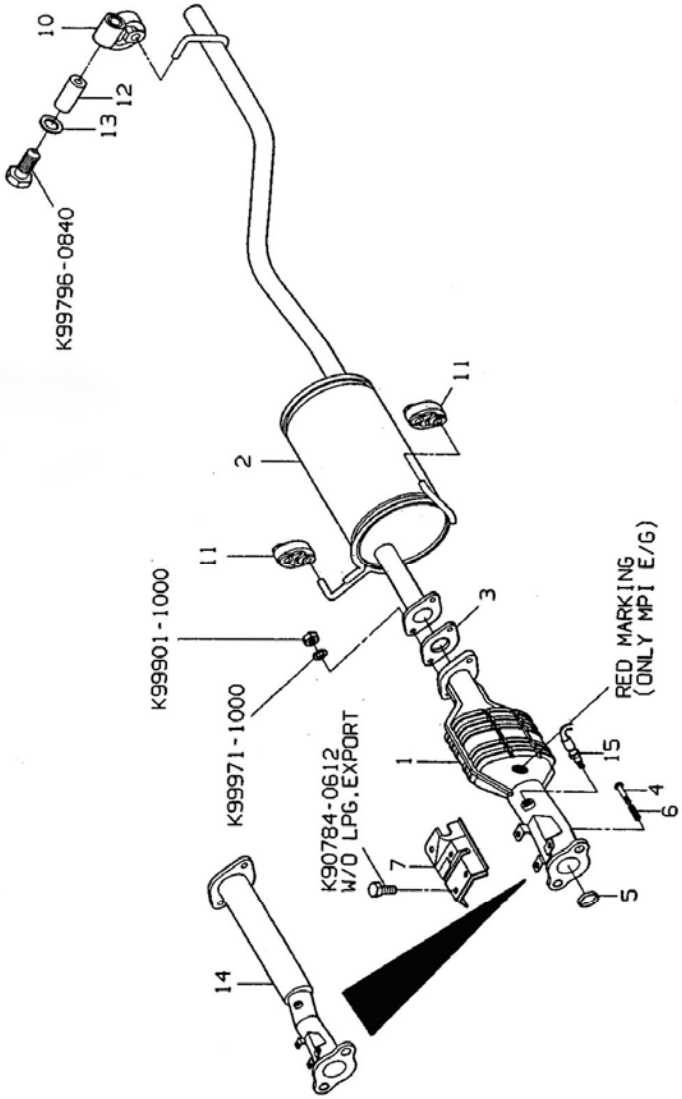

4000B EXHAUST SYSEMT (VAN-COACH)

NO	PARTS NAME	PARTS NUMBER	ALL	TRK	VAN	COH	NOTE
1	CATALYST CONVERTER	AA100-20-600F			1	1	
		AA16A-20-600C			1	1	LPG
		AW100-20-600A			1	1	MPI
		AAW00-20-600J12			1	1	EXPORT
2	MUFFLER	AA110-40-100G			1	1	
3	GASKET	AA100-40-305			1	1	
4	BOLT	AA100-40-354			2	2	
5	SEAL RING	UA110-40-581			1	1	
6	EXHAUSET PIPE SPRING	AA100-40-582			2	2	
7	PROTECTOR NO.1	AA100-40-831A			1	1	W/O LPG, EXP
10	RUBBER HANGER	AA110-40-051			1	1	
11	RUBBER HANGER	AA110-40-051			2	2	
12	RUBBER STOPPER	AA110-40-065			1	1	
13	WASHER	K99952-0822			1	1	
14	FRONT PIPE ASM	AA100-40-500CP01			1	1	EXP: LEADED
15	OXYGEN SENSOR	AA100-18-861			1	1	
		AA16A-18-860			1	1	LPG
		EW100-18-861			1	1	MPI

4100 ACCELERATOR CONTROL SYSTEM

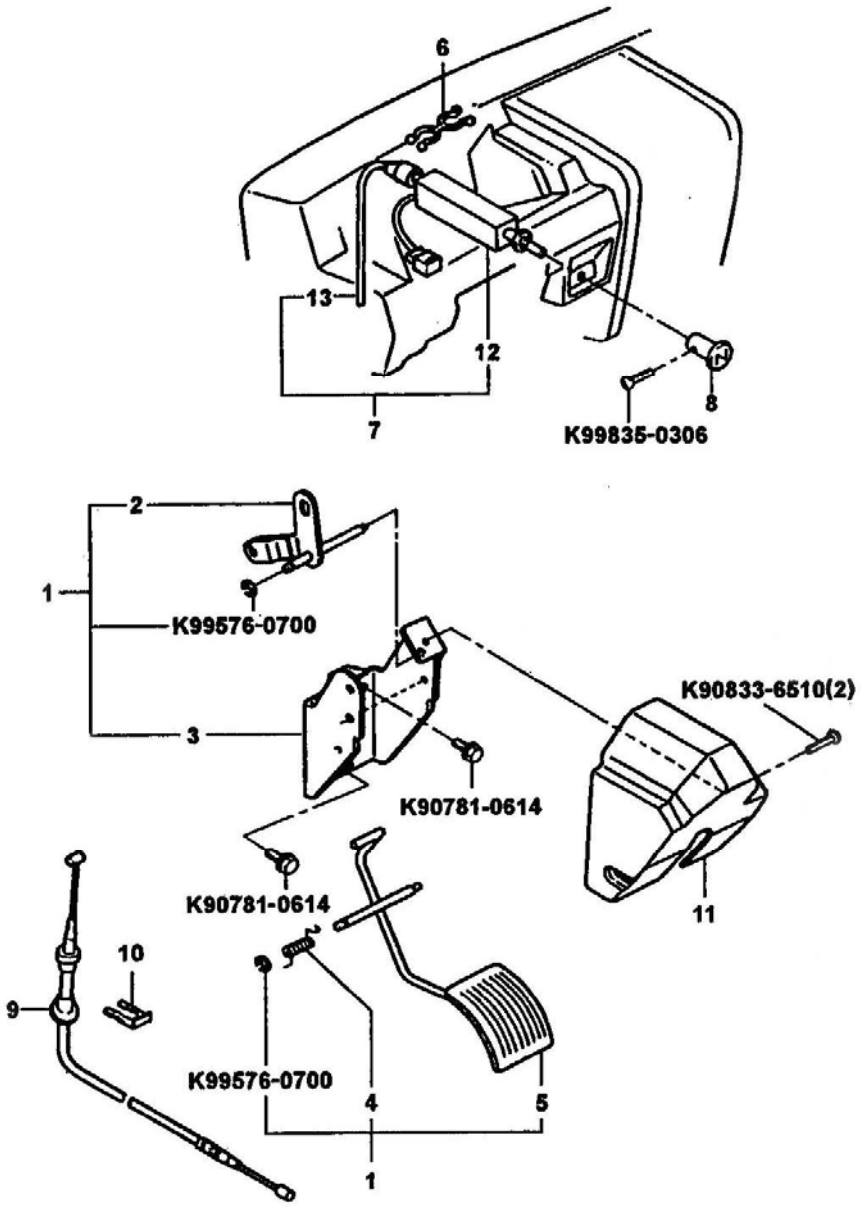

4100 ACCELERATOR CONTROL SYSTEM

NO	PARTS NAME	PARTS NUMBER	ALL	TRK	VAN	COH	NOTE
1	ACCELERATOR LINK ASM	AA100-41-600D					
2	ACCELERATOR SUB ARM ASM	AA100-41-613A	1				
3	ACCELERATOR SUB BRACKET ASM	AA100-41-610B	1				
4	TORSION SPRING	AA100-41-619A	1				
5	ACCELERATOR PEDAL SUB ASM	AA100-41-620B	1				
6	CLAMP	AA100-41-062	1				
7	CHOKE CABLE ASM UP TO 1991	AA100-60-050		1			
	1992-UP	AA101-60-050		1			
		AA111-60-050			1	1	
8	CHOKE CABLE KNOB	AA100-60-053	1				
9	ACCELERATOR CABLE ASM	AA100-41-660F (AA100-41-660A)		1			
		AA16A-41-660B		1			LPG
		AA110-41-660F (AA110-41-660A)			1	1	
10	CLAMP	AA100-41-669	1				
11	ACCELERATOR PEDAL COVER	AA100-41-640B	1				
12	MAGNETIC CASE ASM	AA101-60-052	1				
13	CABLE ASM	AA101-60-051	1				

4200A FUEL PIPE & CLAMP (GASOLINE)

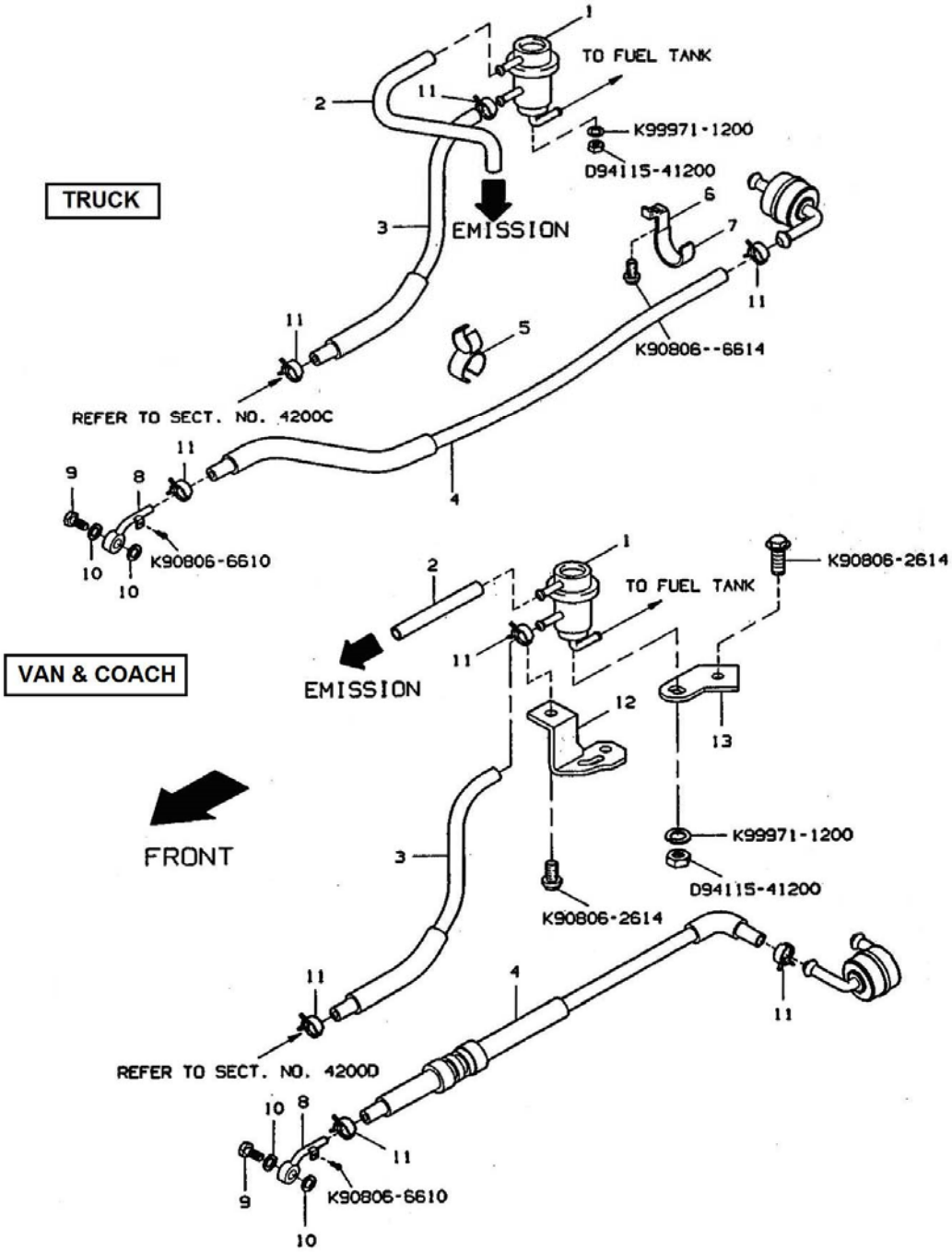

4200A FUEL PIPE & CLAMP (GASOLINE)

NO	PARTS NAME	PARTS NUMBER	ALL	TRK	VAN	COH	NOTE
1	PRESSURE REGULATOR ASM	AA100-42-950A		1			W/O EXP
		AA110-42-950			1	1	W/O EXP
2	VACUUM HOSE	AA100-42-961A		1			W/O EXP
		AA110-42-961B			1	1	W/O EXP
3	RETURN HOSE NO.3	AA100-42-492A		1			W/O EXP
		AA110-42-492C			1	1	W/O EXP
4	FEED HOSE NO.2	AA100-42-491		1			
		AA110-42-491			1	1	
5	FUEL HOSE CLAMP	AA100-42-482		1			
6	FULE HOSE CLAMP	AA100-42-483A		1			
7	RETURN HOSE CLAMP	AA100-42-484		1			
8	FUEL UNION	AA100-42-973	1				
9	UNION BOLT	AA100-42-971	1				
10	UNION GASKET	AA100-42-972	2				
11	CLIP	K99283-1000	4				
			2				EXP
12	REGULATOR BRACKET	AA110-42-951A			1	1	W/O EXP
13	REGULATOR BRACKET	AA110-42-952			1	1	W/O EXP

4200B FUEL FILTER (GASOLINE)

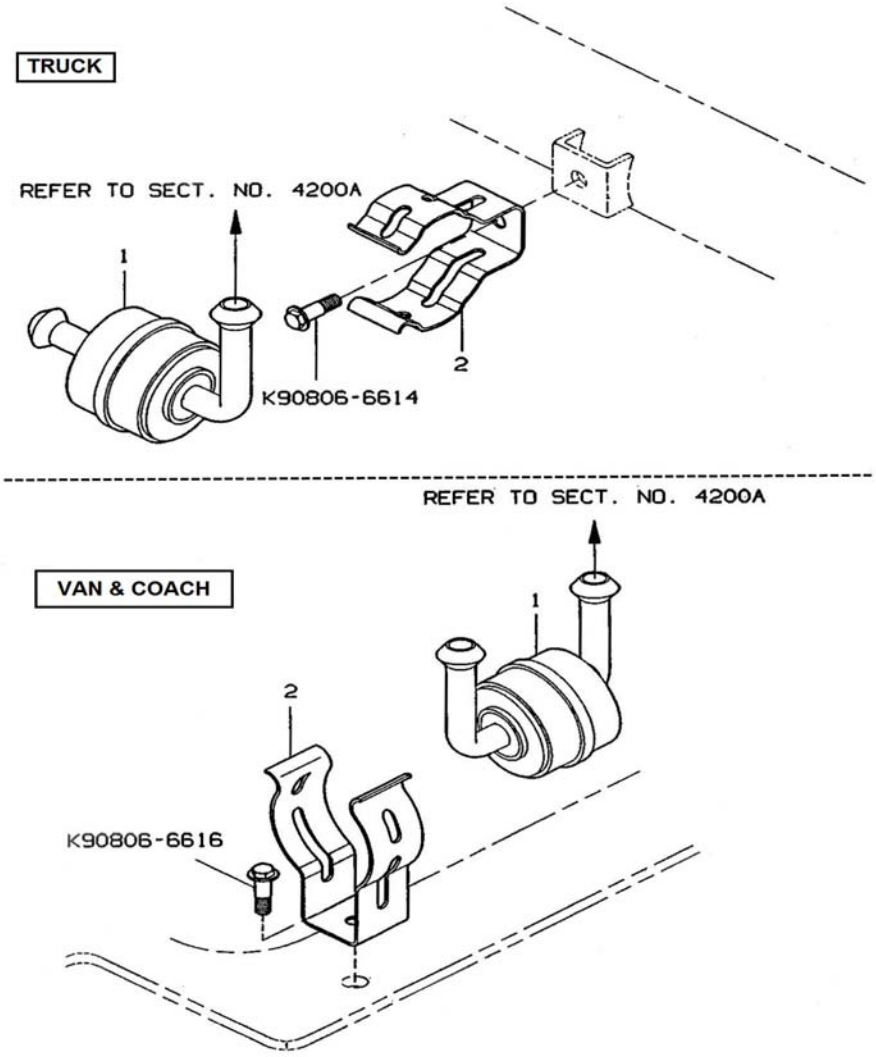

4200B FUEL FILTER (GASOLINE)

NO	PARTS NAME	PARTS NUMBER	ALL	TRK	VAN	COH	NOTE
1	FUEL FILTER	AA100-42-470A		1			
		AA110-42-470A			1	1	
2	FUEL FILTER CLAMP	AA100-42-481		1			
		AA110-42-481			1	1	

4200B.1 FUEL FILTER (MPI)

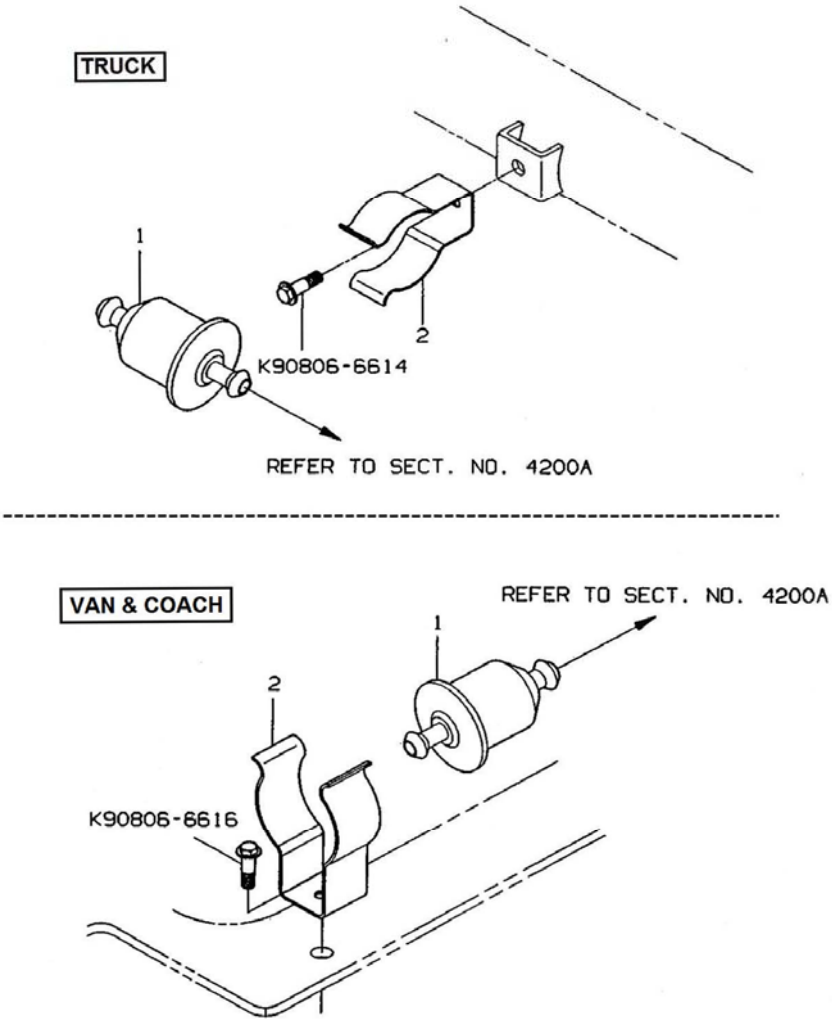

4200B.1 FUEL FILTER (MPI)

NO	PARTS NAME	PARTS NUMBER	ALL	TRK	VAN	COH	NOTE
1	FUEL FILTER	GW100-20-490A	1				
2	FUEL FILTER CLAMP	AA92A-16-678		1			

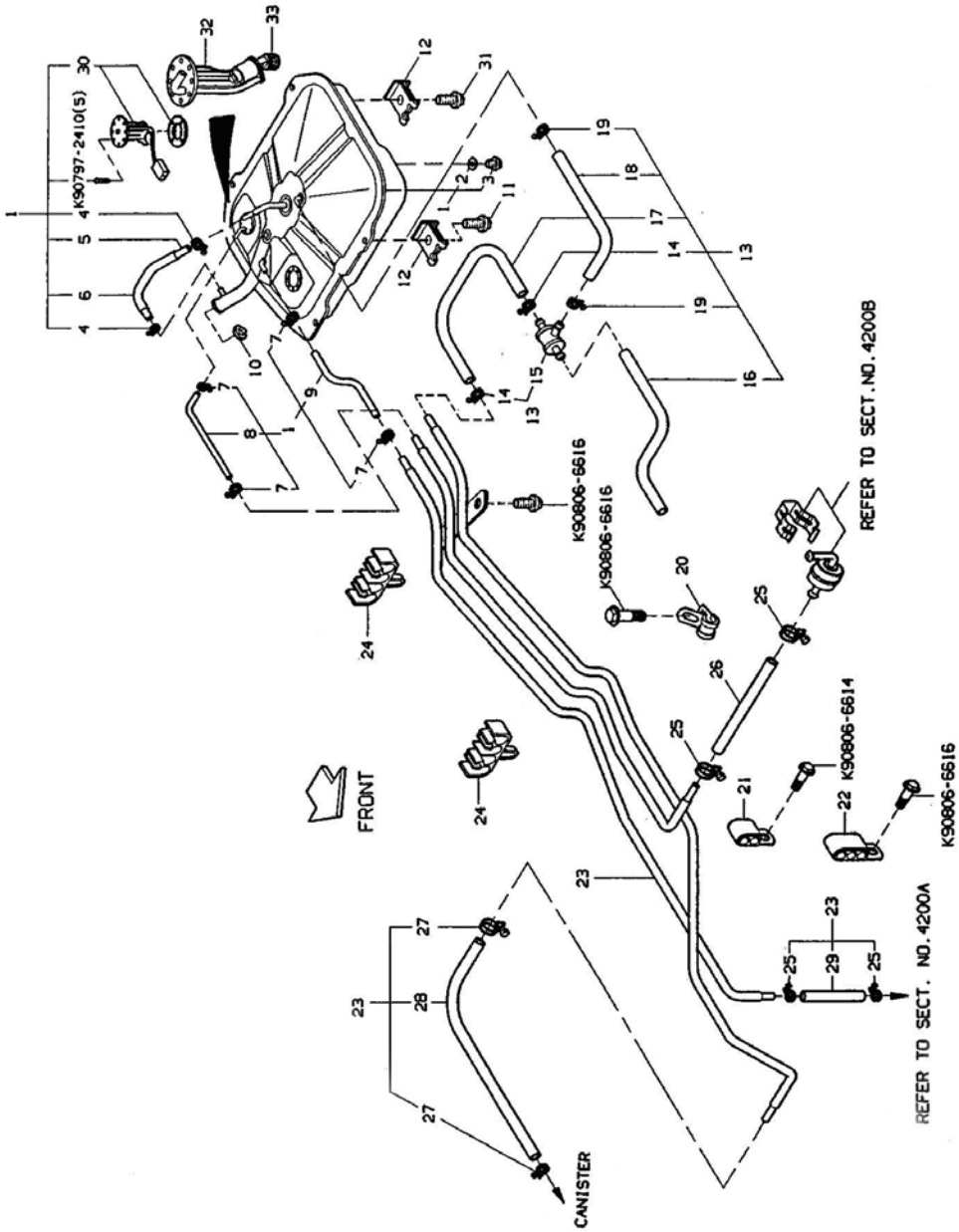
K90797-2410(5)
K90806-6616
K90806-6616
K90806-6614
K90806-6616
REFER TO SECT.NO.4200B
REFER TO SECT. NO.4200A
FRONT
CANISTER

4200C FUEL SYSTEM (TRUCK)

NO	PARTS NAME	PARTS NUMBER	ALL	TRK	VAN	COH	NOTE
1	FUEL TANK	AA100-42-110G		1			
		AA100-42-110FP01		1			OPT.EXP
2	DRIAN PLUG GASKET	AA100-42-046		1			
3	DRIAN PLUG	AA110-42-045		1			
4	CLIP	K99283-1900		2			
5	BREATHER HOSE PROTECTOR	AA100-42-186A		1			
6	BREATHER HOSE	AA100-42-185		1			
7	CLIP	K99283-1000		4			
8	FUEL FEED HOSE	AA100-42-270B		1			
9	FUEL RETURN HOSE	AA100-42-280C		1			
10	FUEL TANK CAP	AA100-42-250B		1			
11	BOLT & WASHER	AA100-42-755		3			
12	FLANGE REINFORCEMENT	AA100-42-750		4			
13	VALVE & HOSE ASM	AA100-42-310B		1			
14	CLIP	K99283-0900		2			
15	VALE SUB ASM	AA100-42-311		1			
16	VACUUM HOSE	AA100-42-314		1			
17	VAPOR HOSE NO.2	AA100-42-313		1			
18	VAPOR HOSE NO.1	AA100-42-312		1			
19	CLIP	K99283-1000		2			
20	SAFETY VALVE BRACKET	AA100-42-330		1			
21	CLAMP	AA100-42-551		1			
22	CLAMP	AA100-42-555		1			
23	FUEL PIPE SUB ASM	AA100-42-540D		1			
		AA101-42-540D PO1		1			OPT:EXP
24	FUEL PIPE CLAMP	AA100-42-548		2			
25	CLIP	K99283-1000		4			
26	FUEL HOSE	AA100-42-549		1			
27	CLIP	K99283-0900		2			W/O EXP LEADED
28	VAPOR HOSE NO.3	AA100-42-545A		1			W/O EXP LEADED
29	RETURN HOSE NO.2	AA100-42-546A		1			
		SS100-72-493A PO1		1			OPT:EXP

4200C FUEL SYSTEM (TRUCK)

NO	PARTS NAME	PARTS NUMBER	ALL	TRK	VAN	COH	NOTE
30	FUEL TANK GAGE	AA100-60-960A		1			
31	BOLT	AA100-42-756		1			
32	ELECTRIC FUEL PUMP	AA100-13-350 (JA100-13-350)		1			
33	PUMP	23100-57507	1				

4200C.1 FUEL SYSTEM (MPI: TRUCK)

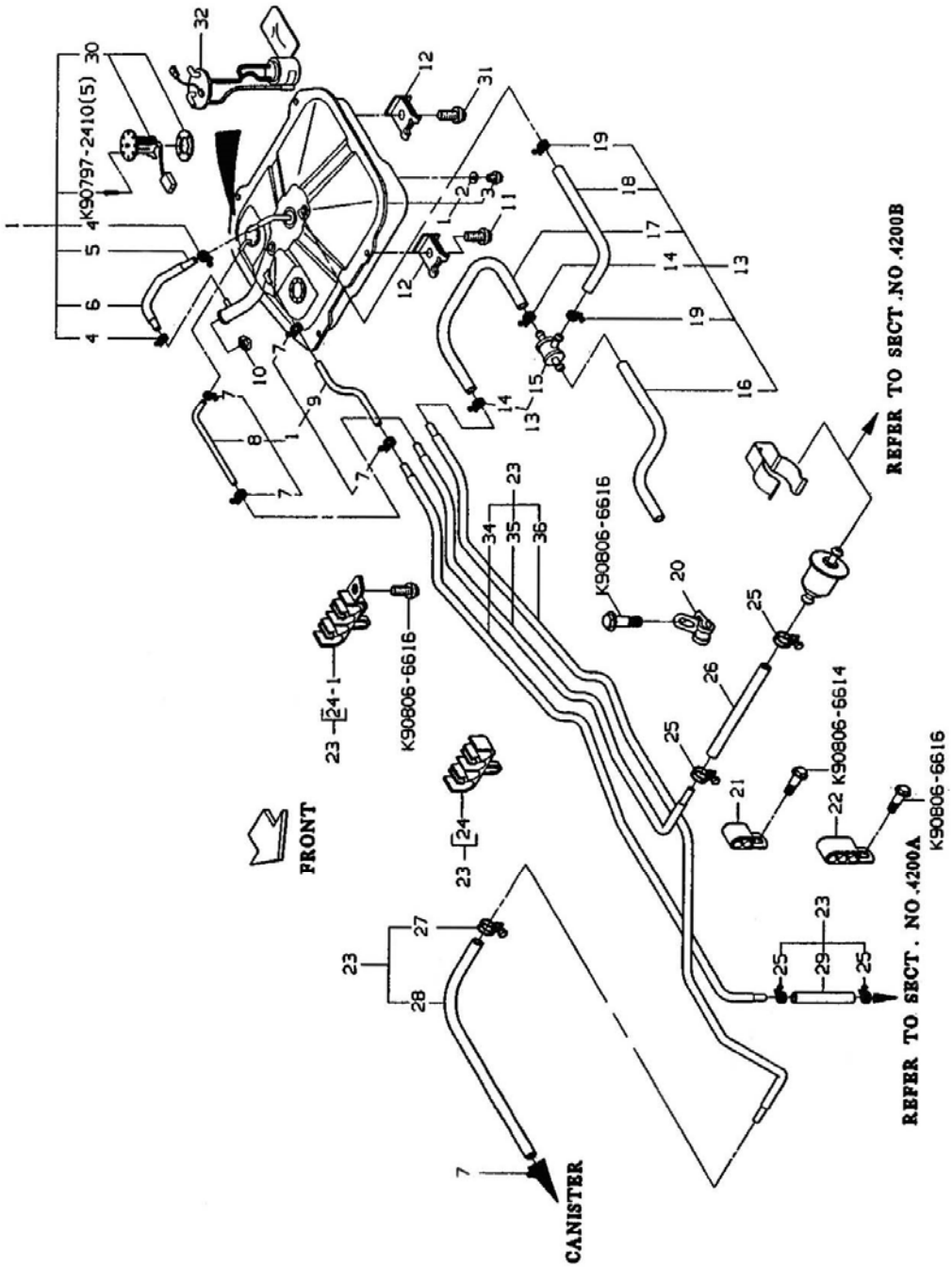

4200C.1 FUEL SYSTEM (MPI: TRUCK)

NO	PARTS NAME	PARTS NUMBER	ALL	TRK	VAN	COH	NOTE
1	FUEL TANK ASM	AA100-42-110G		1			
		AA100-42-110FPO1		1			OPT: EXP
2	DRAIN PLUG GASKET	AA100-42-046		1			
3	DRAIN PLUG	AA100-42-045		1			
4	CLIP	K99283-1900		2			
5	BREATHER HOSE PROTECTOR	AA100-42-186A		1			
6	BREATHER HOSE	AA100-42-185		1			
7	CLIP	K8574-13-157		5			
8	FUEL FEED HOSE	K99359-0849		1			
9	FUEL RETURN HOSE	K99359-0843		1			
10	FUEL TANK CAP	AA100-42-250B		1			
11	BOLT & WASHER	AA100-42-755		3			
12	FLANGE REINFORECMENT	AA100-42-750		4			
13	VALVE & HOSE ASM	AA100-42-310B		1			
14	CLIP	K99283-0900		2			
15	VALVE SUB. ASM	AA100-42-310B		1			
16	VACUUM HOSE	AA100-42-314		1			
17	VAPOR HOSE NO.2	AA100-42-313		1			
18	VAPOR HOSE NO.1	AA100-42-312		1			
19	CLIP	K99283-1000		2			
20	SAFETY VALVE BRACKET	AA100-42-330		1			
21	CLAMP	AA100-42-551		1			
22	CLAMP	AA100-42-555		1			
23	FUEL PIPE SUB ASM	AW100-42-540C		1			
24	HOLDER	KD034-45-940		1			
24-1	HOLDER ASM	OK011-45-920		1			
25	CLIP	K8574-13-157		4			
26	FUEL HOSE	K99359-0813		1			
27	CLIP	K99283-0900		1			
28	EVAPORATOR HOSE	AW100-42-545		1			
29	RETURN HOSE	K99357-0820		1			
30	FUEL TANK GAGE	AA110-60-960A		1			
31	BOLT	AA100-42-756		1			

4200C.1 FUEL SYSTEM (MPI: TRUCK)

NO	PARTS NAME	PARTS NUMBER	ALL	TRK	VAN	COH	NOTE
32	ELECTRIC FUEL PUMP ASM	AW100-13-350B		1			
34	RETURN PIPE	AW100-42-542B		1			
35	FEED PIPE	AW100-42-541B		1			
36	EVAPORATOR PIPE	AW100-42-543		1			

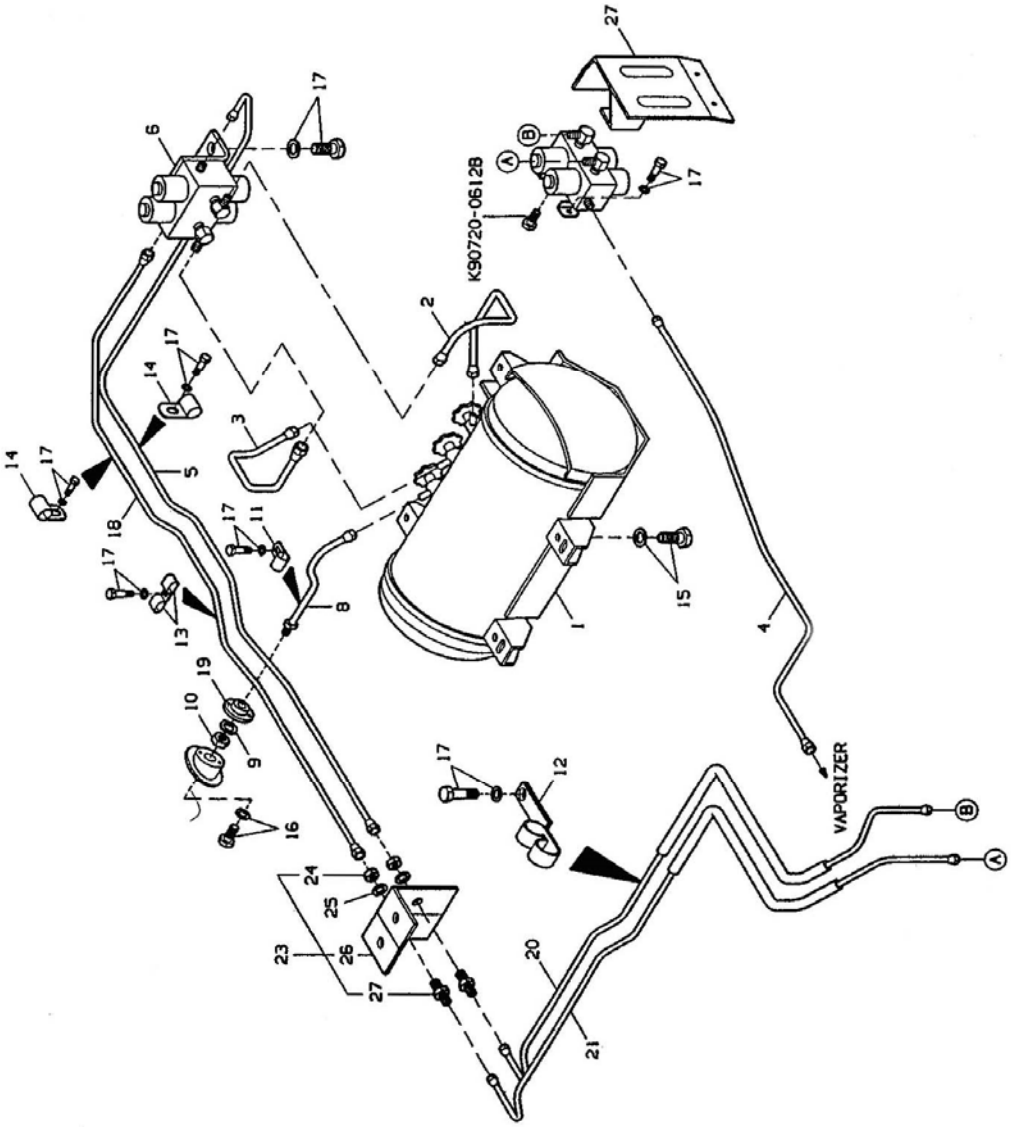
K90720-06128
VAPORIZER
A
B
1
2
3
4
5
6
8
9
10
11
12
13
14
15
16
17
18
19
20
21
23
24
25
26
27

4200D FUEL SYSTEM (LPG: TRUCK)

NO	PARTS NAME	PARTS NUMBER	ALL	TRK	VAN	COH	NOTE
1	LPG BOMBE ASM	AA16A-42-110A		1			
2	FUEL VAPORIZER PIPE NO.1	AA13A-42-541L		1			
3	FUEL LIQUID PIPE NO.1	AA13A-42-542L		1			
4	LPG FUEL PIP	AA16A-42-744A		1			
5	FUEL VAPORIZER PIPE NO.2	AA16A-42-545C		1			
6	CUT SOLENOID & FILTER	AA16A-85-160		1			
7	SOLENOID & FILTER ASM	AA16A-85-170		1			
8	LPG HOSE ASM	AA13A-42-210E		1			
9	WASHER	AA13A-42-766		1			
10	COUPLER NUT	AA13A-42-767A		1			
11	HOSE CLIP	AA131-42-768		1			
12	PIPE CLIP	AA16A-42-522C		1			
14	CLAMP	AA100-61-478		4			
15	BOLT & WASHER	AA13A-42-755		4			
16	BOLT & WASHER	K90806-6512		2			
17	BOLT & WASHER	K99786-0616		11			
18	FUEL LIQUID PIPE NO.2	AA16A-42-547C		1			
19	FILLER RETAINER	AA13A-42-212		1			
20	FUEL VAPORIZER PIPE NO.3	AA16A-42-543C		1			
21	FUEL LIQUID PIPE NO.3	AA16A-42-743C		1			
22	FUEL JOINT SUB ASM	AA16A-42-330B		1			
23	FUEL JOINT	AA16A-42-331		1			
24	JOINT BRACKET	AA161-42-332B		1			
25	WASHER	K99974-1400		1			
26	NUT	K99922-1400		1			
27	SOLENOID VALVE COVER	AA16A-85-180B		1			

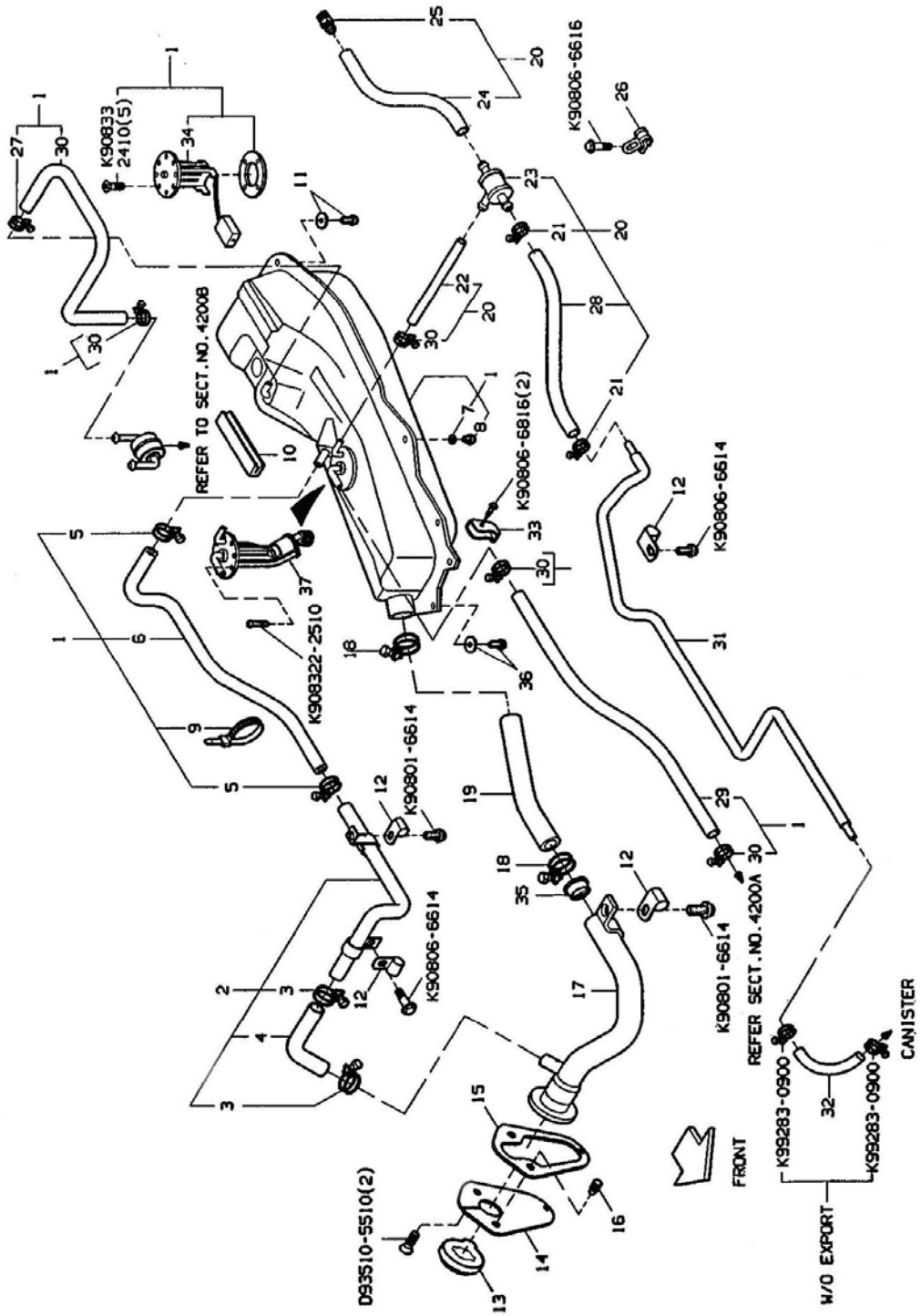
K90833
2410(5)
REFER TO SECT.NO.4200B
K908322-2510
K90806-6616
K90806-6816(2)
K90806-6614
K90801-6614
K90806-6614
K90801-6614
REFER SECT.NO.4200A
K99283-0900
K99283-0900
CANISTER
W/O EXPORT
FRONT
D93510-5510(2)

4200E FUEL SYSTEM (VAN-COACH)

NO	PARTS NAME	PARTS NUMBER	ALL	TRK	VAN	COH	NOTE
1	FUEL TANK ASM	AA110-42-110F			1	1	
		AA110-53-110C PO1			1	1	OPT: EXP
2	BREATHER TUBE NO.2	AA110-42-230			1	1	
3	CLIP	AA110-42-188			2	2	
4	BREATHER TUBE HOSE	AA110-42-232			1	1	
5	CLIP	AA110-42-188			2	2	
6	FUEL BREATHER HOSE	AA110-42-185			1	1	
7	DRAIN PLUG GASKET	AA100-42-046			1	1	
8	DRAIN PLUG	AA100-42-045			1	1	
9	BAND	K99709-3200			1	1	
10	PROTECTOR	AA100-42-765			1	1	
11	BOLT & WASHER	AA13A-42-755			3	3	
12	CLAMP	D96221-30705			2	2	
13	FUEL TANK CAP	AA111-42-250A			1	1	
14	INLET PIPE SHIELD	AA110-42-242B			1	1	
15	SHIELD PLATE SET	AA110-43-243			1	1	
16	SHIELD MOUNTING CLIP	AA110-42-047			3	3	
17	FUEL FILLTER PIPE	AA110-42-210B			1	1	
		AA110-42-210B PO1			1	1	OPT:EX
18	CLAMP	K99282-5300			2	2	
19	FILLER HOSE	AA110-42-241A			1	1	
20	VALVE & HOSE ASM	AA110-42-310B			1	1	
21	CLIP	K99283-0900			2	2	
22	VAPOR HOSE NO.1	AA100-42-312			1	1	
23	VALVE SUB ASM	AA100-42-311			1	1	
24	VACUUM HOSE	AA100-42-314			1	1	
25	VAPOR HOSE CLAMP	AA110-42-315			1	1	
26	SAFETY VALVE BRACKERT	AA100-42-330			1	1	
27	FUEL FEED HOSE	AA110-42-186			1	1	
28	VAPOR HOSE NO.2	AA110-42-316A			1	1	
29	FUEL RETURN HOSE	AA110-42-280C			1	1	
		AA110-42-493A PO1			1	1	OPT:EXP

NO	PARTS NAME	PARTS NUMBER	ALL	TRK	VAN	COH	NOTE
30	CLIP	K99283-1000			6	6	
31	FUEL BAPOR TUBE	AA110-42-543			1	1	
		AA111-42-543 PO1			1	1	EXP
32	VAPOR HOSE NO.3	AA110-42-545			1	1	
33	TANK MOUNTING BRACKET	AA110-42-980			1	1	
34	FUEL TANK GAGE	AA110-60-960B			1	1	
35	FUEL TANK VALVE SUB ASM	AA110-42-940			1	1	
36	BOLT & WASHER	AA100-42-756			1	1	
37	ELECTRCI FUEL PUMP	AA110-13-350					

4200E.1 FUEL SYSTEM (MPI: VAN-COACH)

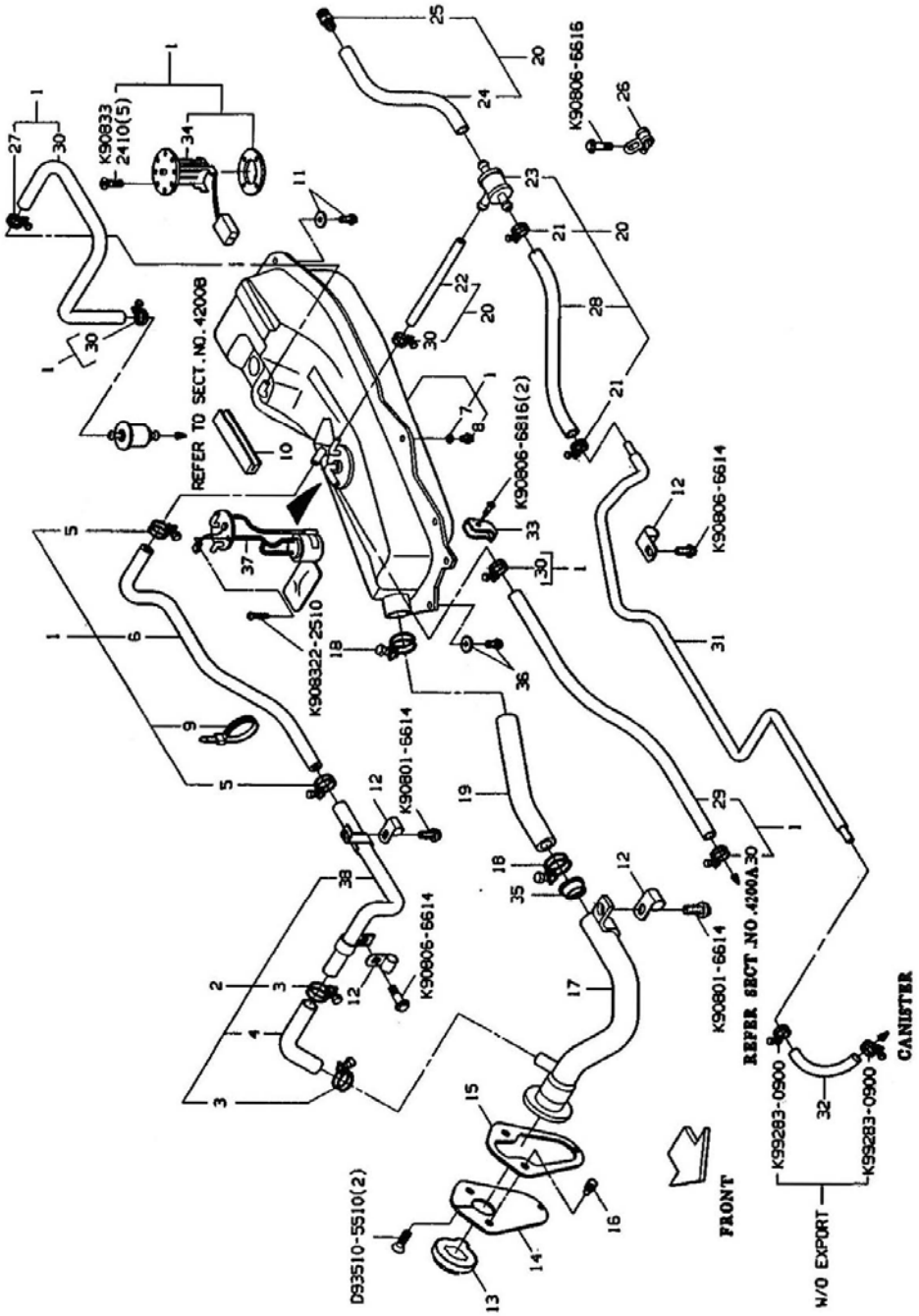

4200E.1 FUEL SYSTEM (MPI: VAN-COACH)

NO	PARTS NAME	PARTS NUMBER	ALL	TRK	VAN	COH	NOTE
1	FUEL TANK ASM	AW111-42-110A			1	1	
2	BREATHER TUBE NO.2	AW111-42-230A			1	1	
3	CLIP	AA110-42-188			2	2	
4	BREATHER TUBE HOSE	AW111-42-232			1	1	
5	CLIP	AA110-42-188			2	2	
6	FUEL BREATHER HOSE	AA110-42-185			1	1	
7	DRAIN PLUG GASKET	AA100-42-046			1	1	
8	DRAIN PLUG	AA100-42-045			1	1	
9	BAND	K99709-3200			1	1	
10	PROTECTOR	AA100-42-765			1	1	
11	BOLT & WASHER	AA13A-42-755			3	3	
12	CLAMP	D96221-30705			2	2	
13	FUEL TANK CAP	AA111-42-250A			1	1	
14	INLET PIPE SHIELD	AA110-42-242B			1	1	
15	SHIELD PLATE SET	AA110-43-243			1	1	
16	SHIELD MOUNTING CLIP	AA110-42-047			3	3	
17	FUEL FILLER PIPE	AA110-42-210B			1	1	
		AA110-42-210B PO1			1	1	OPT:EXP
18	CLAMP	K99282-5300			2	2	
19	FILLER HOSE	AA110-42-241A			1	1	
20	VALVE & HOSE ASM	AA110-42-310B			1	1	
21	CLIP	K99283-0900			2	2	
22	VAPOR HOSE NO.1	AA100-42-312			1	1	
23	VALVE SUB ASM	AA100-42-311			1	1	
24	VACUUM HOSE	AA100-42-314			1	1	
25	VAPOR HOSE CLAMP	AA110-42-315			1	1	
26	SAFETY VALVE BRACKET	AA100-42-330			1	1	
27	FUEL FEED HOSE	K99359-0632			1	1	
28	VAPOR HOSE NO.2	AA110-42-316A			1	1	
29	FUEL RETURN HOSE	K99359-0885			1	1	
30	CLIP	K8574-13-157			4	4	

4200E.1 FUEL SYSTEM (MPI: VAN-COACH)

NO	PARTS NAME	PARTS NUMBER	ALL	TRK	VAN	COH	NOTE
31	FUEL VAPOR TUBE	AA110-42-543			1	1	
		AA111-42-543 PO1			1	1	
32	VAPOR HOSE NO.3	AA110-42-545			1	1	W/ EXP LEADED
33	TANK MOUNTING BRACKER	AA110-42-980			1	1	
34	FUEL TANK GAGE	AA100-60-960B			1	1	
35	FUEL TANK VALVE SUB ASM	AA110-42-940			1	1	
36	BOLT & WASHER	AA100-42-756			1	1	
37	ELECTRIC FUEL PUMP	AW111-13-350C			1	1	
38	BREATHER PIPE	AW111-42-230A			1	1	

4200F FUEL SYSTEM (LPG: VAN-COACH)

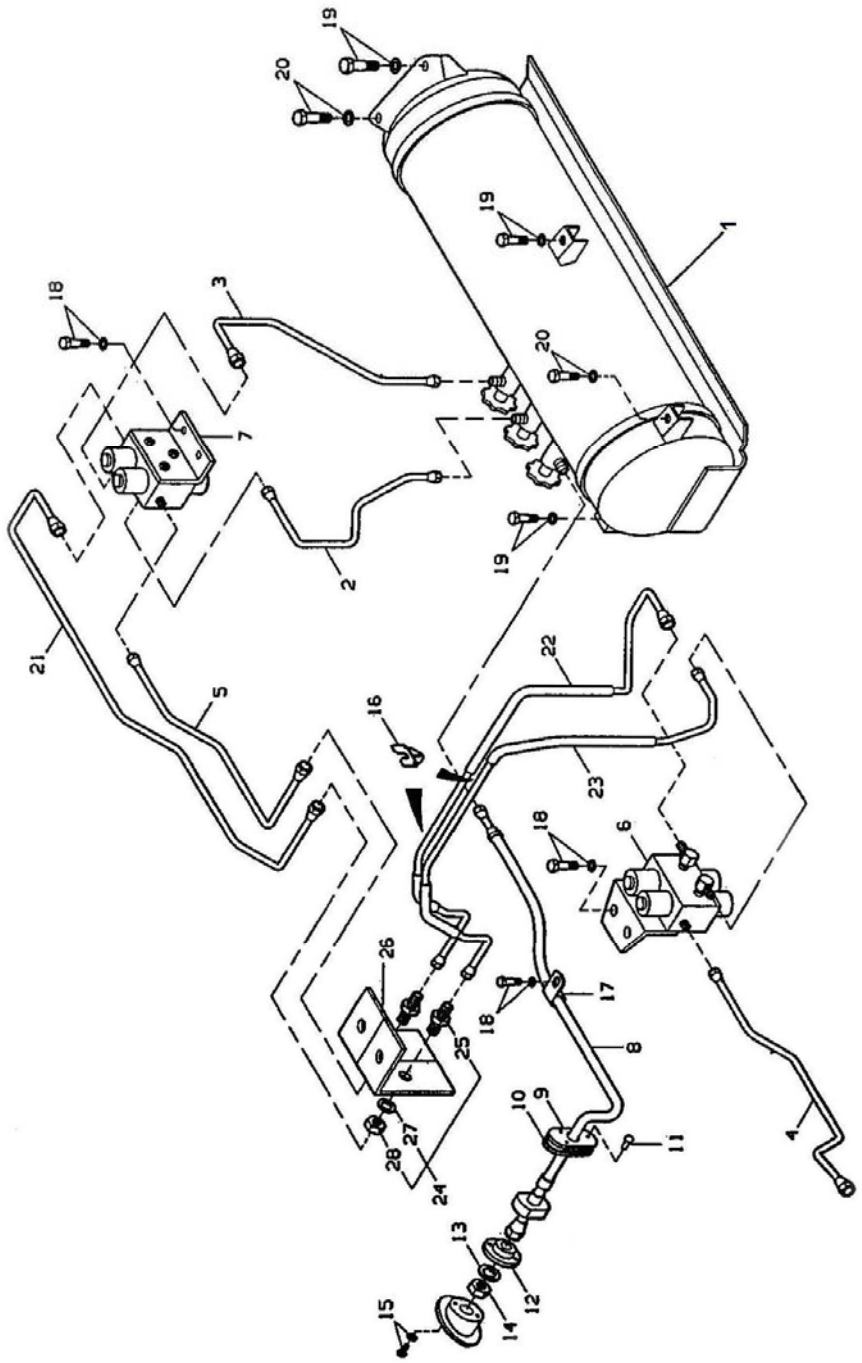

4200F FUEL SYSTEM (LPG: VAN-COACH)

NO	PARTS NAME	PARTS NUMBER	ALL	TRK	VAN	COH	NOTE
1	LPG BOMBE ASM	AA161-42-110A			1	1	
2	FUEL VPAORIZER PIPE NO.1	AA131-42-541M			1	1	
3	FUEL LIQUID PIPE NO.1	AA131-42-542L			1	1	
4	LPG FUEL IPE	AA161-42-744B			1	1	
5	FUEL VAPORIZER PIPE NO.2	AA161-42-545C			1	1	
6	CUT SOLENOID & FILTER	AA161-85-160			1	1	
7	SOLENOID & FILTER ASM	AA161-85-170B			1	1	
8	LPG HOSE ASM	AA131-42-210F			1	1	
9	INLET PIPE SHIELD	AA131-42-242			1	1	
10	SHIELD PLATE SET	AA110-42-243			1	1	
11	SHIELD MOUNTING CLIP	AA110-42-047			3	3	
12	FILLER RETAINER	AA131-42-212B			1	1	
13	WASHER	AA13A-42-766			1	1	
14	NUT COULPER	AA13A-42-797A			1	1	
15	BOLT & WASHER	K90806-6512			2	2	
16	FUEL PIPE HOLDER	AA161-42-555A			2	2	
17	HOSE CLIP	AA131-42-768			1	1	
18	BOLT & WASHER	K99784-6616			6	6	
19	BOLT & WASHER	AA13A-42-755			3	3	
20	BOLT & WASHER	K90781-6825			2	2	
21	FULE LIQUID PIPE NO.2	AA161-42-547B			1	1	
22	FUEL VAPORIZER PIPE NO.3	AA161-42-543B			1	1	
23	FUEL LIQUID PIPE NO.3	AA161-42-743C			1	1	
24	FUEL JOINT SUB ASM	AA161-42-340A			2	2	
25	FUEL JOINT	AA16A-42-331			1	1	
26	JOINT BRACKET	AA161-42-337			1	1	
27	WASHER	K99974-1400			1	1	
28	NUT	K99922-1400			1	1	

4310A CLUTCH & BRAKE PEDALS

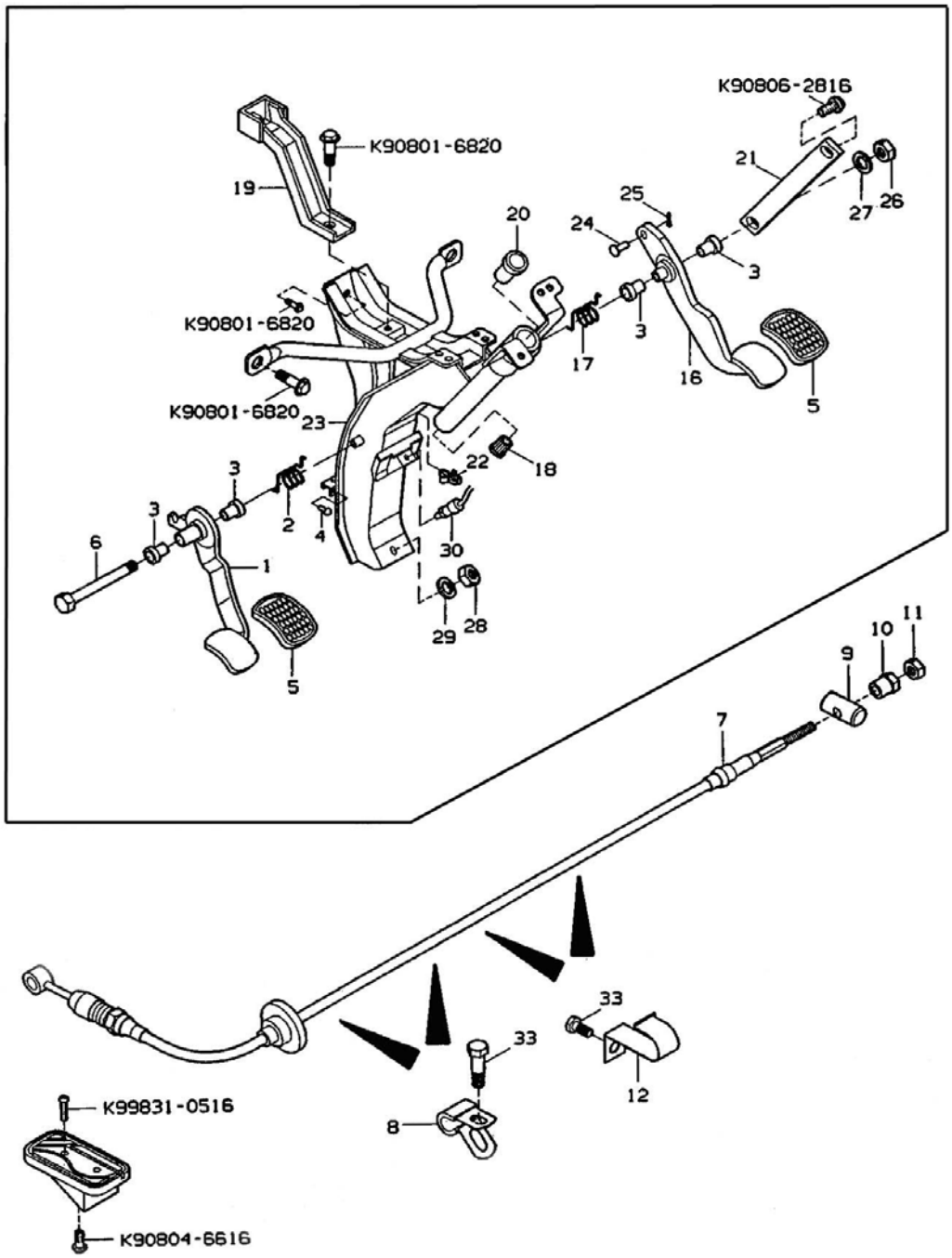

4310A CLUTCH & BRAKE PEDALS

NO	PARTS NAME	PARTS NUMBER	ALL	TRK	VAN	COH	NOTE
1	CLUTCH PEDAL SUB ASM	AA100-41-030A	1				
2	RETURN SPRING	AA100-41-308	1				
3	BUSHING	AA100-32-022	4				
4	STOPPER CUSHION	AA100-43-029	1				
5	PEDAL PAD	AA100-43-028	2				
6	BOLT	AA100-43-061A	1				
7	CLUTCH RELEASE CABLE	AA100-41-150B		1			
		AA110-41-150B			1	1	
8	CLUTCH CALBE CLAMP	AA100-44-454			2	2	
9	WIRE PIVOT PIN	AA100-44-371	1				
10	WIRE ADJUSTMENT NUT	AA100-44-1555	1				
11	NUT	D94120-40600	1				
13	CLUTCH CABLE CLAMP	AA100-41-157	1				
16	BRAKE PEDAL	AA100-43-030	1				
17	RETURN SPRING	AA100-43-084A	1				
18	BUSHING	AA100-32-423	1				
19	BRACKET	AA100-43-060	1				
20	BUSHING	AA100-32-060	1				
21	PEDAL SHAFT LOCK PLATE	AA100-43-066B	1				
22	CLIP	AA100-43-023	1				
23	STEERING BRACKET	AA100-41-070B	1				
24	JOINT PIN	AA100-43-153	1				
25	COTTER PIN	D95381-02015	1				
26	NUT	D94110-40800	1				
27	WASHER	D94531-00800	1				
28	NUT	K90901-0811B	1				
29	WASHER PLATE	AA100-43-091	1				
30	STOP LAMP SWITCH	AA100-66-490	1				
31	FOORT REST REINFORCEMENT	AA100-43-011A	1				
32	FOOT REST PAD	AA100-43-021B	1				
33	BOLT	AK90806-6616		5	4	4	
34	PEDAL ASM	AA100-43-300B	1				

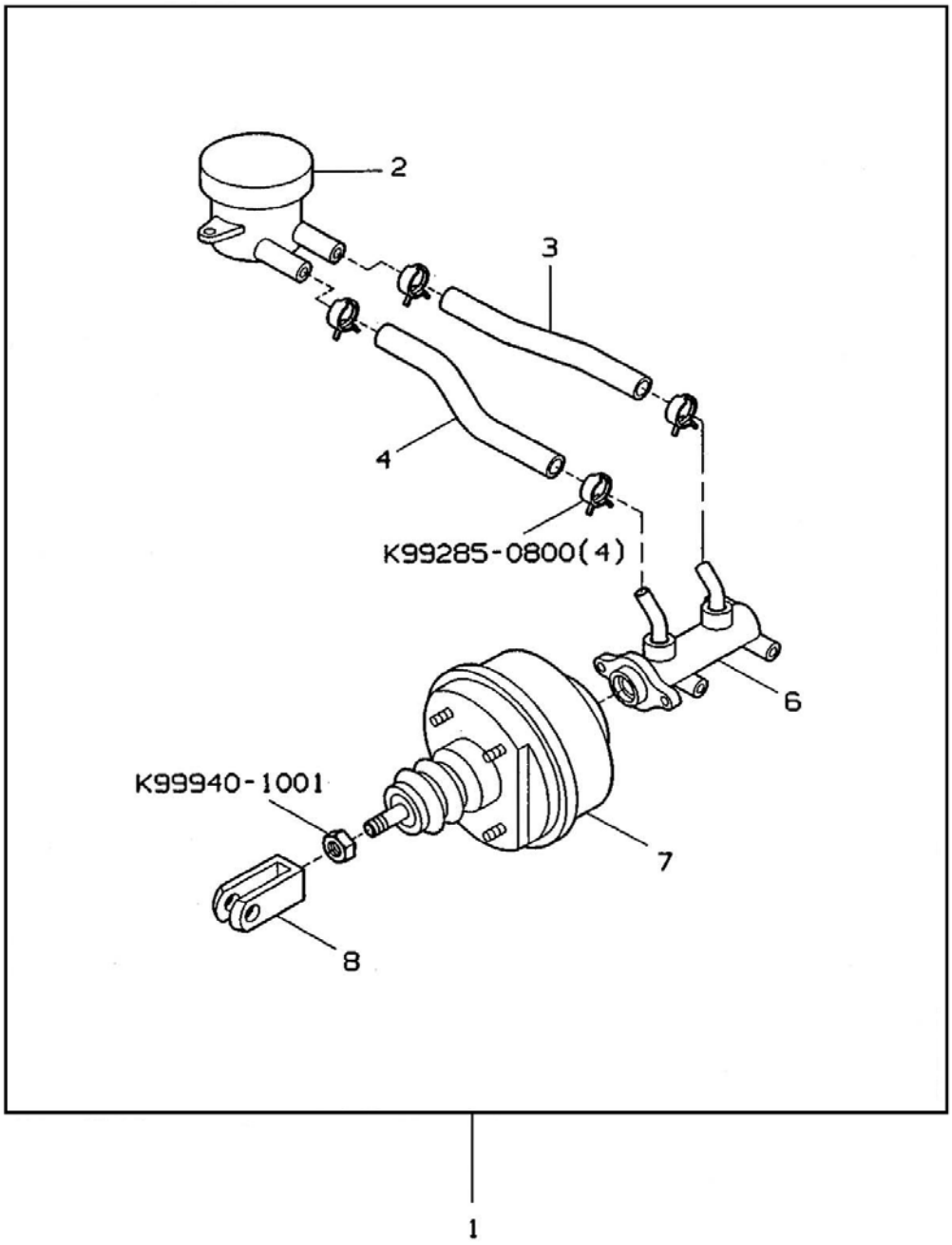
2
3
4
K99285-0800(4)
6
K99940-1001
7
8
1

4310B BRAKE MASTER CYLINDER

NO	PARTS NAME	PARTS NUMBER	ALL	TRK	VAN	COH	NOTE
1	MASTER CYLINDER	AA100-43-950F (AA100-43-400D)	1				
2	RESERVOIR TANK	AA100-43-550A	1				
3	RESERVOIR NO.1 HOSE	AA100-43-423A	1				
4	RESERVOIR NO.2 HOSE	AA100-43-424A	1				
6	CYLINDER ASM	AA110-43-400D (AA100-43-400D)	1				
7	MASTER VAC	AA110-43-800	1				
8	FORK ASM	MDX50-43-141	1				

4320 MAIN BRAKE PIPING

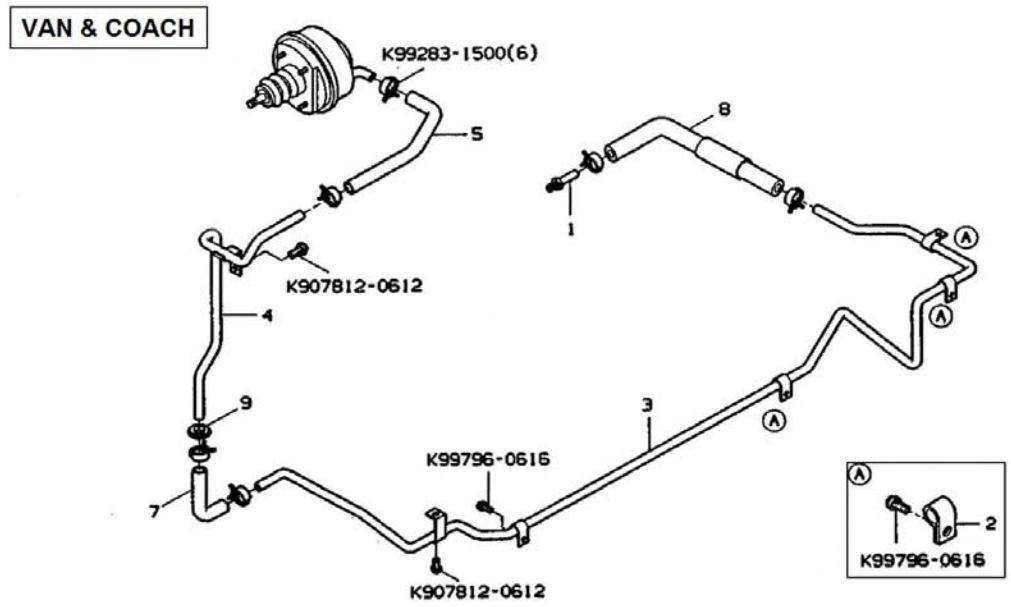

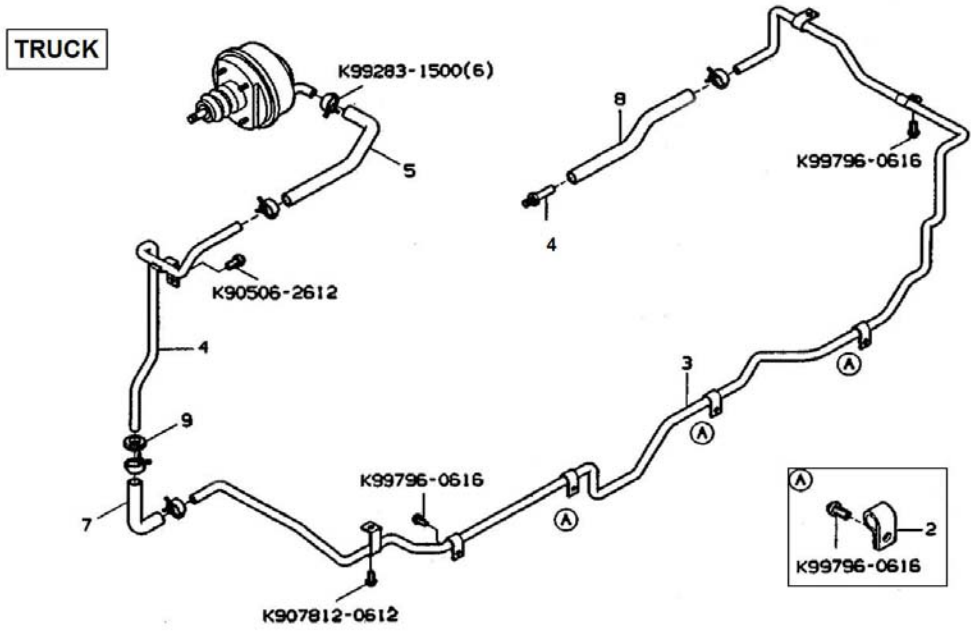

4320 MAIN BRAKE PIPING

NO	PARTS NAME	PARTS NUMBER	ALL	TRK	VAN	COH	NOTE
1	VACUUM UNION	AA100-43-837A	1				
2	CLAMP	AA100-44-454	3				
3	VACUUM PIPE ASM	AA100-43-840C		1			
		AA110-43-840			1	1	
4	VACUUM PIPE ASM	AA100-43-860	1				
5	VACUUM HOSE ASM	AA100-43-640B	1				
7	VACUUM HOSE	AA100-43-836	1				
8	UNION HOSE	AA100-43-842		1			
		AA110-43-642			1	1	
9	GROMMET	AA100-43-606	1				

4400 PARKING BRAKE SYSTEM (TRUCK)

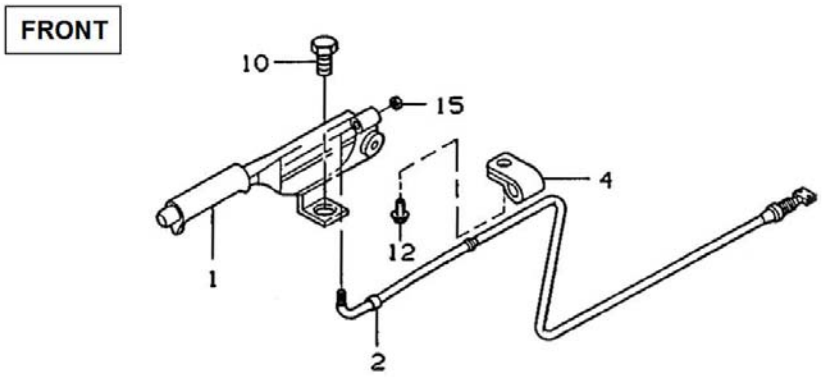

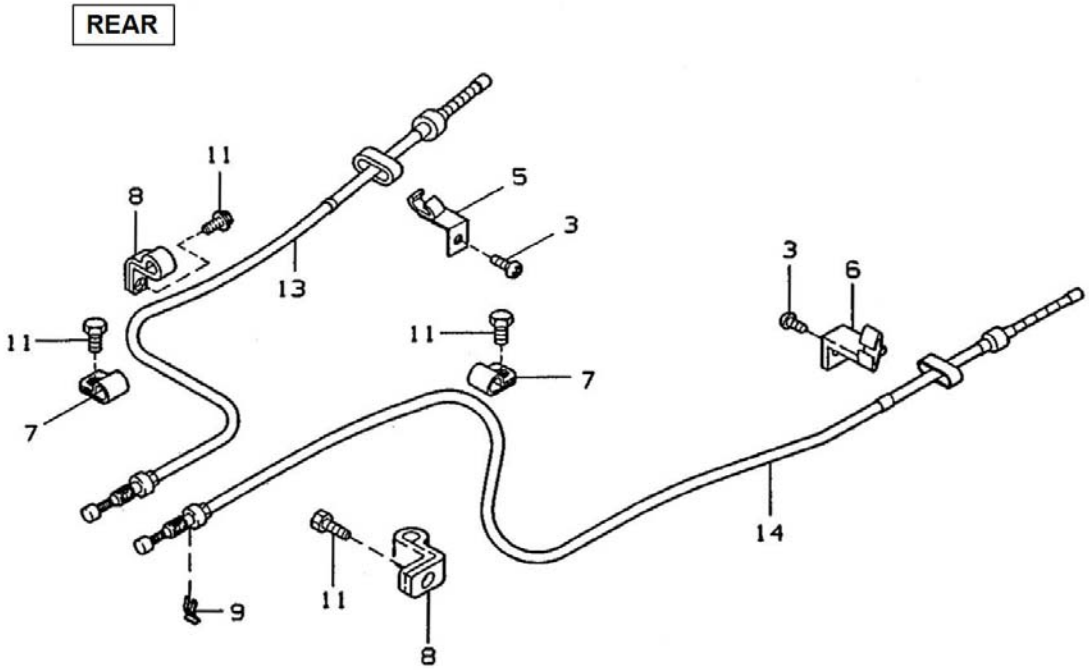

4400 PARKING BRAKE SYSTEM (VAN-COACH)

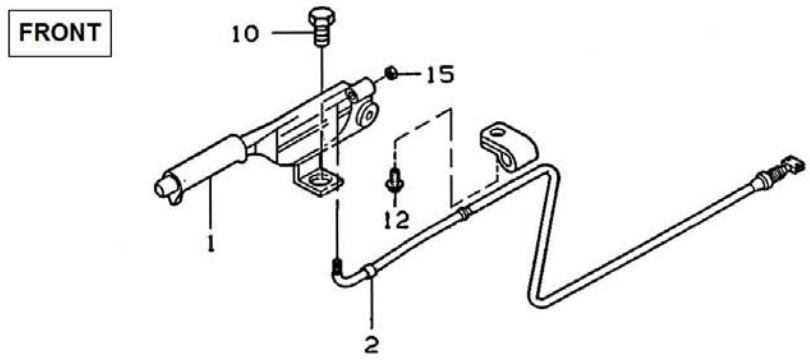

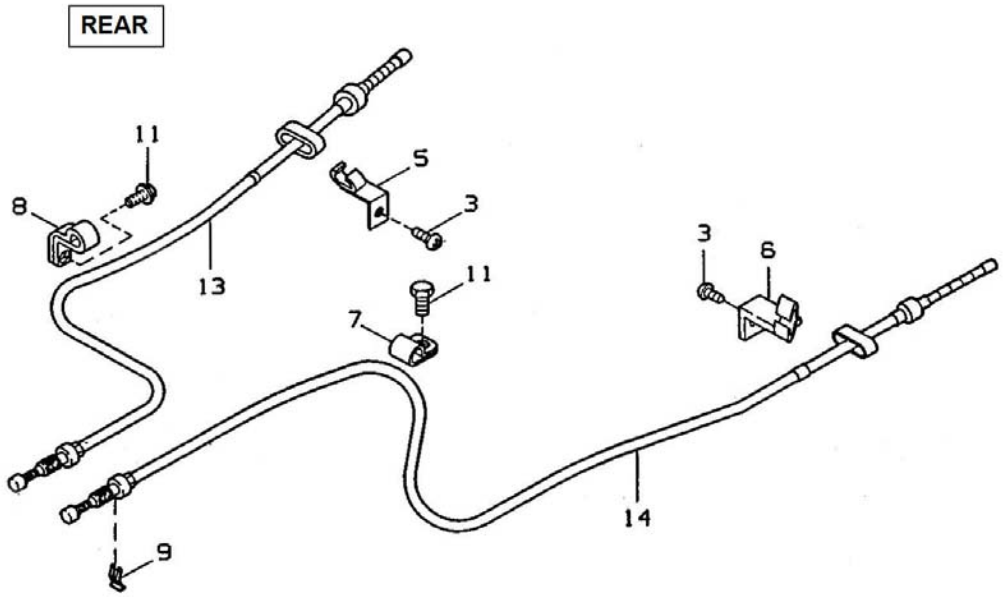

4400 PARKING BRAKE SYSTEM

NO	PARTS NAME	PARTS NUMBER	ALL	TRK	VAN	COH	NOTE
1	PARKING BRAKE LEVER ASM	AA100-44-010A (AA100-44-010C)	1				
2	FRONT PARKING CABLE	AA100-44-150		1			
		AA110-44-150B			1	1	
3	WASHER & SCREW	K90797-2608	2				
4	CLAMP	AA100-44-172		1			
5	REAR CABLE GUIDE RH	AA100-44-451	1				
6	REAR CABLE GUIDE LH	AA100-44-452		1			
		AA110-44-452			1	1	
7	CLAMP	A92761-10081		2	3	3	
8	CLAMP	AA100-44-456		2			
		AA110-44-455A			2	2	
9	CLAMP	AA100-44-375	3				
10	BOLT & WASHER	K907816-0820	2				
11	BOLT & WASHER	K907812-0616		4	5	5	
12	BOLT & WASHER	K907812-0612	1				
13	REAR PARKING CABLE RH	AA100-44-410C		1			
		AA110-44-410B			1	1	
14	REAR PARKING CABLE LH	AA100-44-420C		1			
		AA110-44-420B			1	1	
15	NUT	K99906-0600	2				

4510 BRAKE & CLUTCH PIPING (TRUCK)

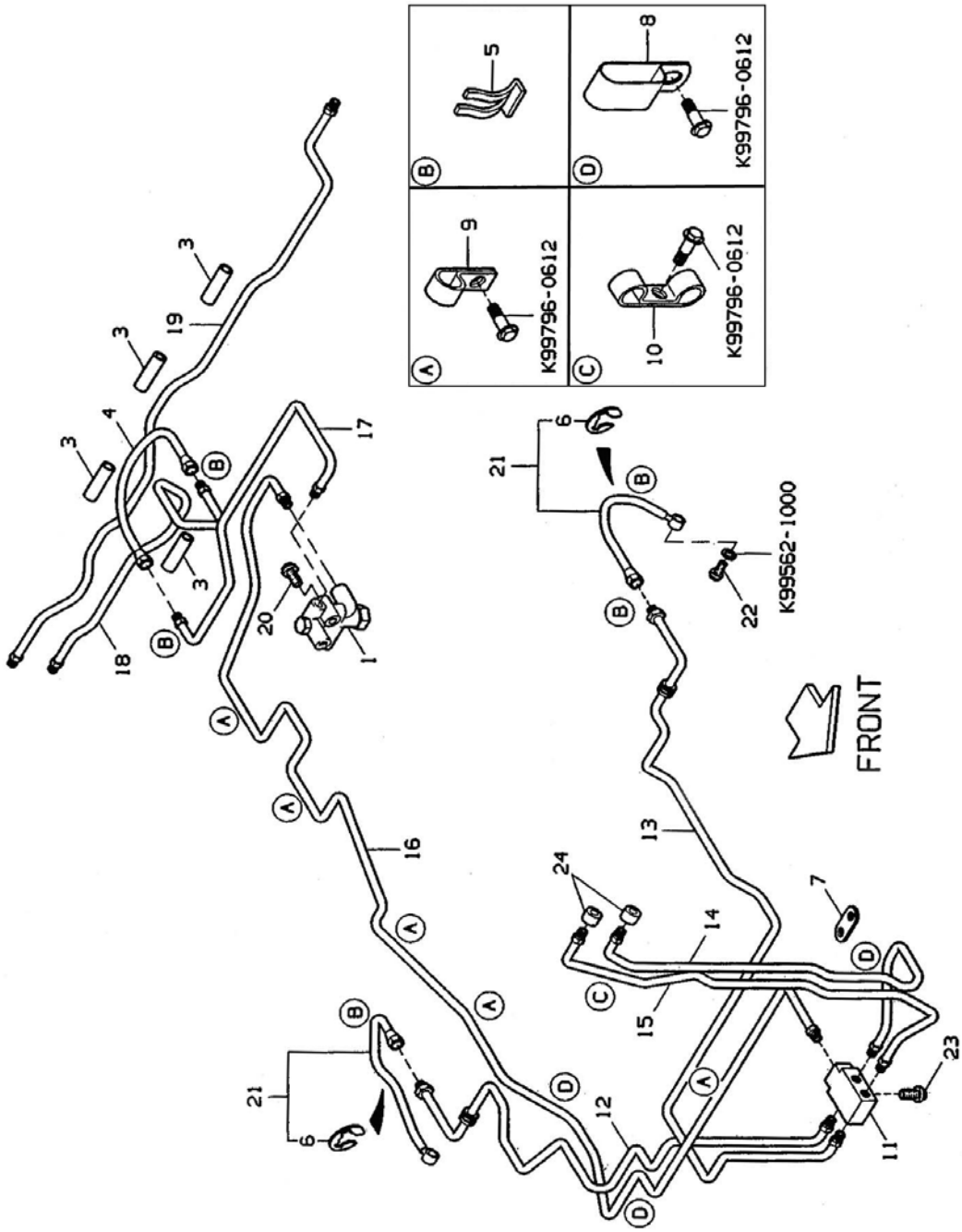

4510 BRAKE & CLUTCH PIPING (VAN-COACH)

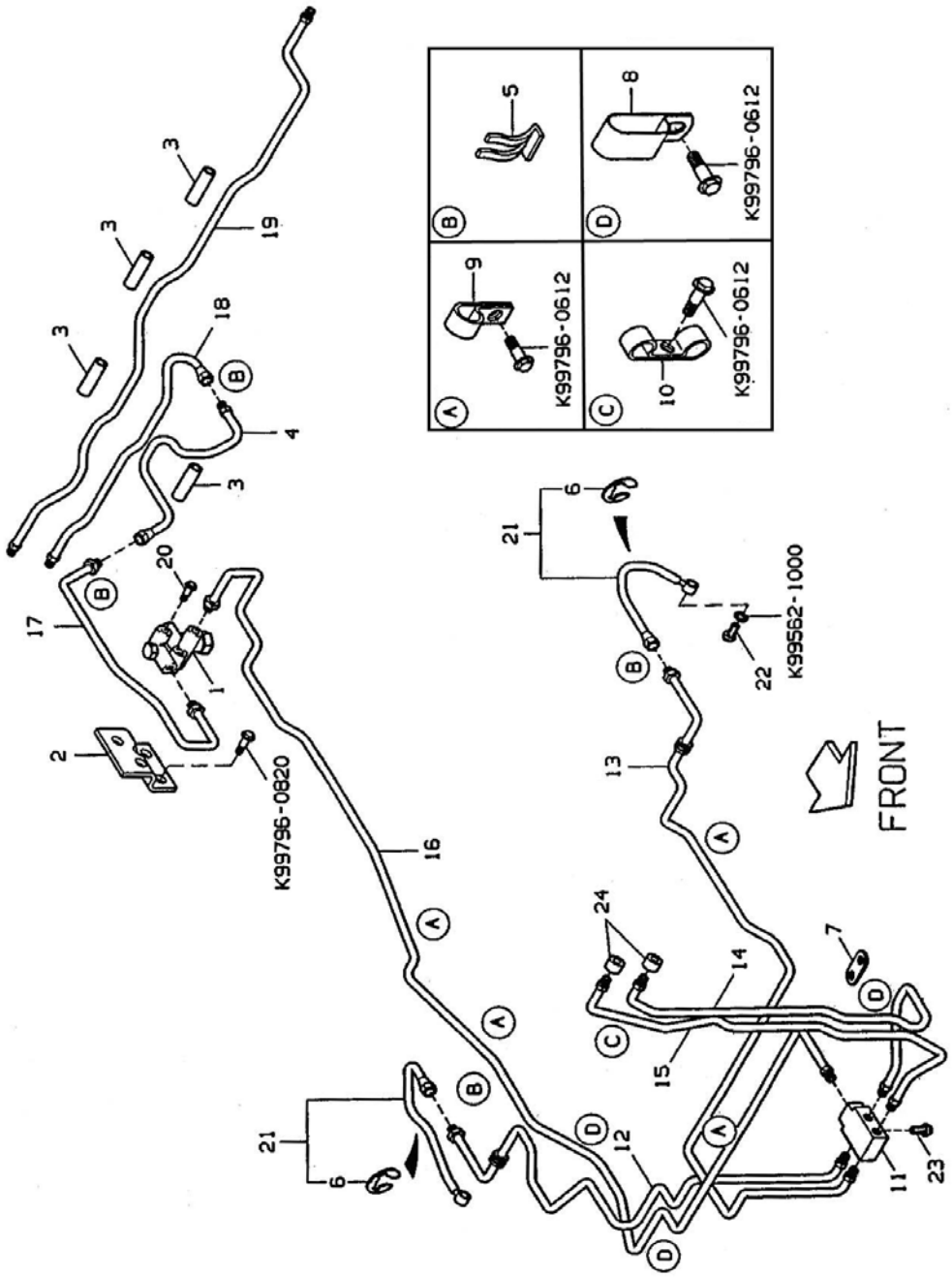

4510 BRAKE & CLUTCH PIPING

NO	PARTS NAME	PARTS NUMBER	ALL	TRK	VAN	COH	NOTE
1	PROPORTIONING VALVE ASM	AA101-45-900		1			
		AA111-45-900			1	1	
2	PROPORTIONING VALVE BRACKET	AA100-43-939A		1			
3	HOSE	AA100-45-722	4				
4	REAR FLEX HOSE	AA100-43-820		1			
		AA110-43-820			1	1	
5	TUBE CLAMP	AA100-43-635	4				
6	"E" RING	96160-01200	4				
7	GROMMET	AA100-45-499	1				
8	CLAMP	AA100-45-921	3				
9	CLAMP	AA100-42-551		4	7	7	
		D96221-30706	5				LPG
10	CLAMP	AA100-45-922	1				
11	5-WAY JOINT PIPE	AA100-45-453	1				
12	FRONT BRAKE PIPE RH	AA100-45-280 (DISCONTINUED)		1			
		AA110-45-280			1	1	
13	FRONT BRAKE PIPE LH	AA100-45-320	1				
14	FRONT BRAKE PIPE	AA100-45-250A	1				
15	REAR BRAKE NO.1 PIPE	AA100-45-350A	1				
16	REAR BRAKE NO.2 PIPE	AA100-45-360A		1			
		AA110-45-360B			1	1	
17	REAR BRAKE NO.3 PIPE	AA100-45-370		1			
		AA110-45-370			1	1	
18	REAR BRAKE PIPE	AA100-45-650A		1			
		AA110-45-650A			1	1	
19	REAR BRAKE PIPE	AA100-45-660A		1			
		AA110-45-660A			1	1	
20	BOLT & WASHER	K99896-0816		2			
		K99796-0640			2	2	
21	FLEX HOSE	AA100-43-810	2				
22	UNION BOLT	AA100-43-694	2				

4510 BRAKE & CLUTCH PIPING

NO	PARTS NAME	PARTS NUMBER	ALL	TRK	VAN	COH	NOTE
23	BOLT & WASHER	K99796-0830	1				
24	SPACER	AA100-43-990	2				

4600A SHIFTER

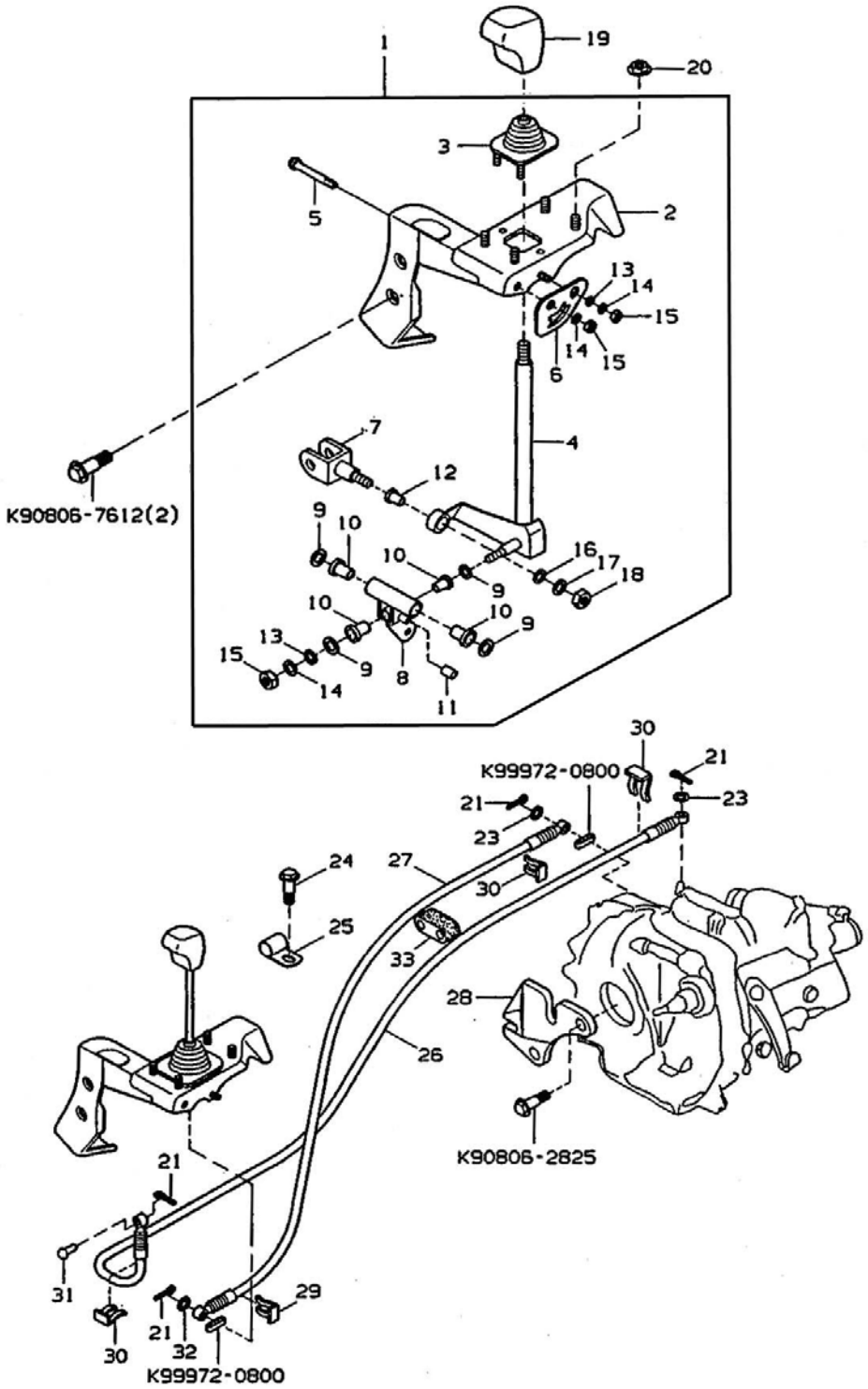

4600A SHIFTER

NO	PARTS NAME	PARTS NUMBER	ALL	TRK	VAN	COH	NOTE
1	SHIFTER ASM	AA110-46-100A	1				
2	CONTROL SUPPORT ASM	AA100-46-120B	1				
3	SHIFTER LEVER BOOT	AA100-46-081	1				
4	SHIFTER LEVER SUB ASM	AA100-46-010D	1				
5	BOLT	AA100-46-071	1				
6	SHIFTER LEVER STOPPER	AA100-46-041	1				
7	CONNECTING ROD END	AA100-46-061	1				
8	SHIFT LEVER HOLDER ASM	AA100-46-050D	1				
9	"O" RING	D96711-19014	4				
10	BUSHING	AA100-46-681	4				
11	BUSHING	AA100-46-085A	1				
12	BUSHING	AA100-46-083	2				
13	WASHER	D94613-10800	2				
14	WASHER	D94511-00800	3				
15	NUT	D94120-40800	3				
16	WASHER	D94613-10601	1				
17	WASHER	D94511-00600	1				
18	NUT	D94110-40600	4				
19	SHIFTER KNOB	AA100-46-520	1				
20	LOCK NUT	AA100-46-141A	4				
21	CLIP	AA100-46-183	4				
22	WASHER	D94611-10800	3				
23	BOLT & WASHER	D91611-40612	1				
25	CLAMP	K907812-0612	3				
26	SELECT CABLE	AA100-46-160D		1			
		AA110-46-160C			1	1	
27	SHIFT CABLE	AA16A-46-150E		1			
		AA161-46-150D			1	1	
28	TRANSMISSION CONTROL BRACKET	AA110-46-171	1				
29	CLIP	AA100-46-187A	1				
30	CLIP	AA100-46-181A	4				
31	PIN	K99952-1200	1				

4600A SHIFTER

NO	PARTS NAME	PARTS NUMBER	ALL	TRK	VAN	COH	NOTE
32	WASHER	D94614-10800	1				
33	GROMMET	AA100-46-191	1				

4600B SHIFTER (MPI)

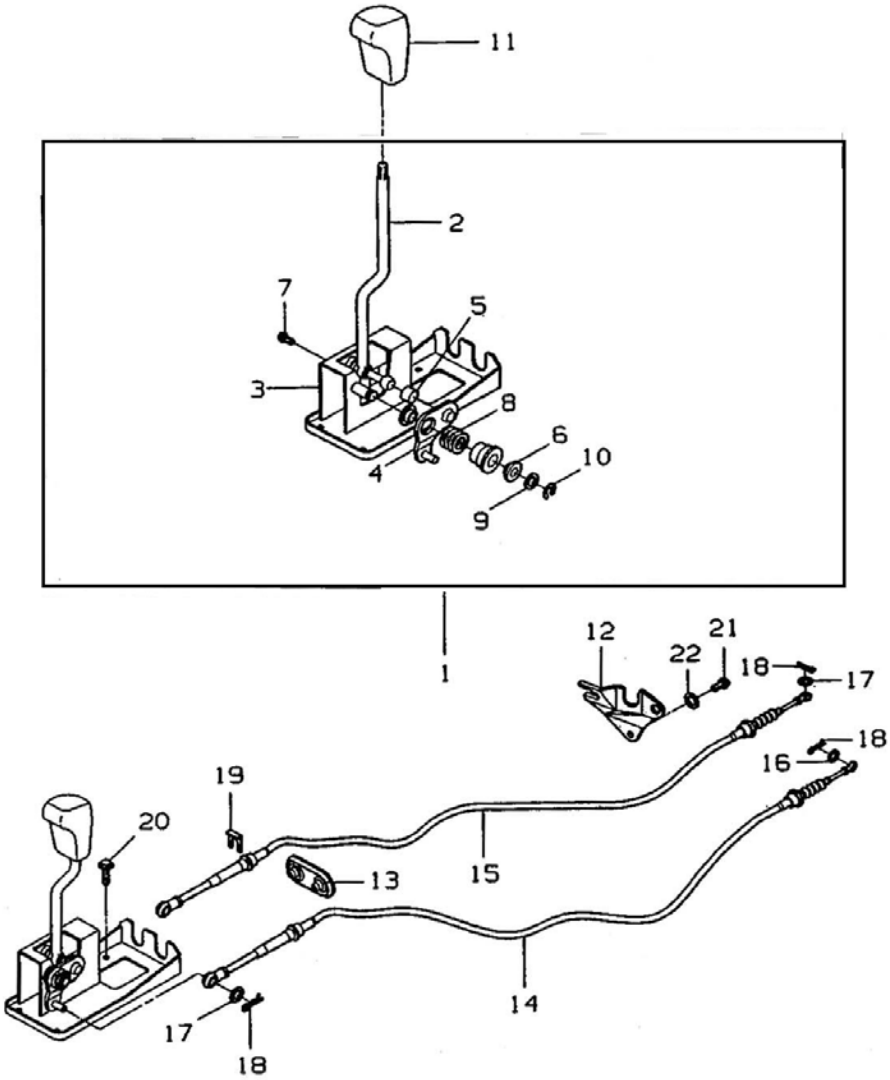

4600B SHIFTER (MPI)

NO	PARTS NAME	PARTS NUMBER	ALL	TRK	VAN	COH	NOTE
1	SHIFTER ASM	AA110-46-100E	1				
2	LEVER ASM	AA110-46-110	1				
3	SUPPORT ASM	AA110-46-120C	1				
4	SELECT ASM	AA110-46-130A	1				
5	BUSHING LINK	AA110-46-151	1				
6	BUSHING	AA110-46-161	2				
7	BOLT	K90792-0510	4				
8	SPRING	AA110-46-141A	1				
9	WASHER	K99952-1224	1				
10	RETAINER	K99576-1000	1				
11	SHIFTER KNOB	AA100-46-520	1				
12	BRACKET	AA16A-46-171C	1				
13	GROMMET	AA100-46-191A	1				
14	SELECT CABLE	AA16B-46-160		1			
		AA162-46-160 (AA110-46-160C)			1	1	
15	SHIFT CABLE	AA16A-46-150B		1			
		AA161-46-150F			1	1	
16	WASHER	D94614-10800	1				
17	WASHER	D94611-10800	3				
18	CLIP	AA100-46-183	4				
19	CLIP	AA100-46-181A	4				
20	BOLT	K907812-0612	4				
21	BOLT	K90806-2825	1				
22	WASHEER	K90152-1200	1				

KIA METRO

BODY

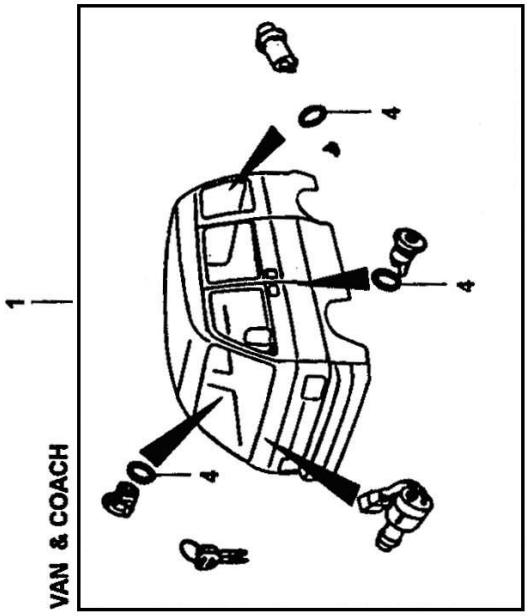
VAN & COACH
1
4
4
4

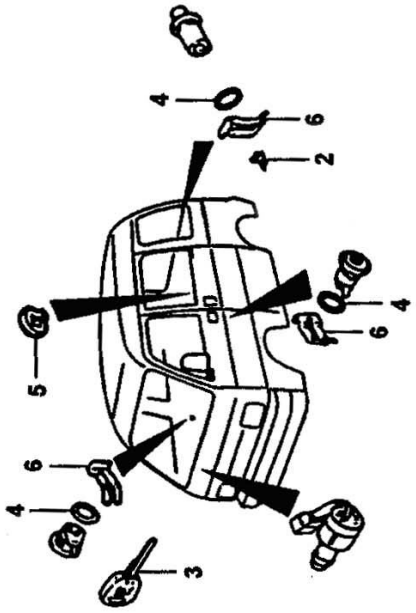
4
6
2
4
6
4
5
6
4
3

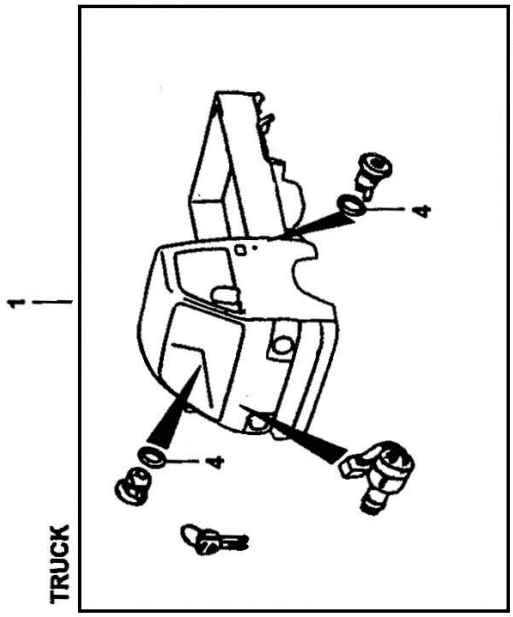
TRUCK
1
4
4

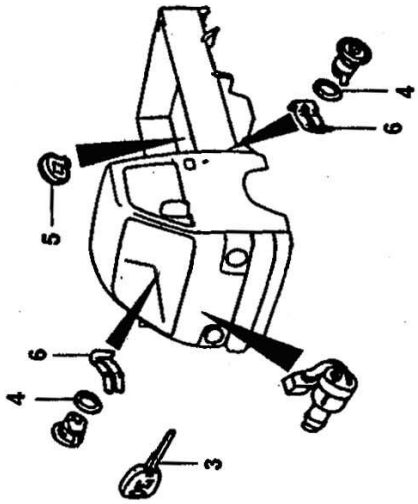
4
6
5
6
4
3

0900 KEY SET

NO	PART NAME	PART NUMBER	ALL	TRK	VAN	COH	NOTE
1	KEY SET	AA100-09-010B (AA100-09-010B)		1			
		AA13A-09-010D		1			LPG
		AA110-09-010D			1	1	
2	CLIP	K99278-04040			1	1	
3	KEY	AA100-66-492B	2				
4	KEY CYLINDER PACKING	K0223-58-962		2	3	3	
5	GAS CAP	AA100-42-250B	1				
6	CLAMP	B001-62-495		2	3	3	

5010 FRONT & REAR BUMPER

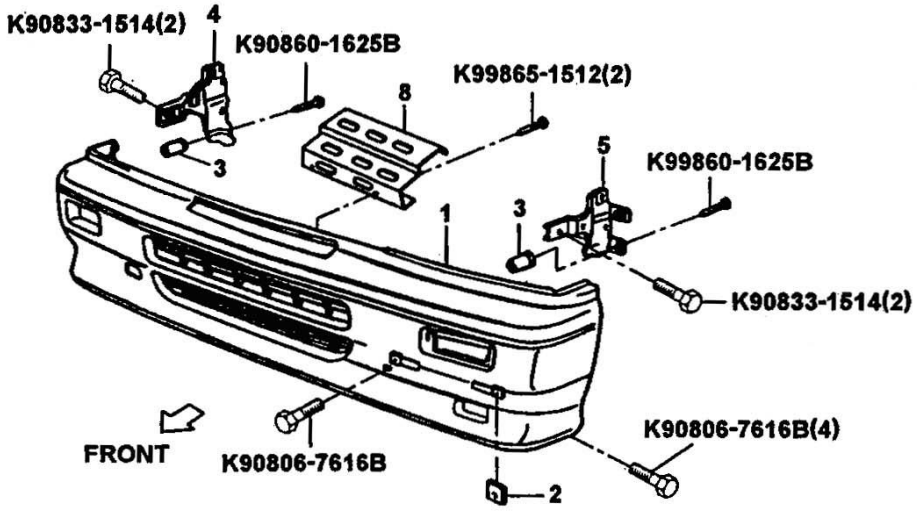

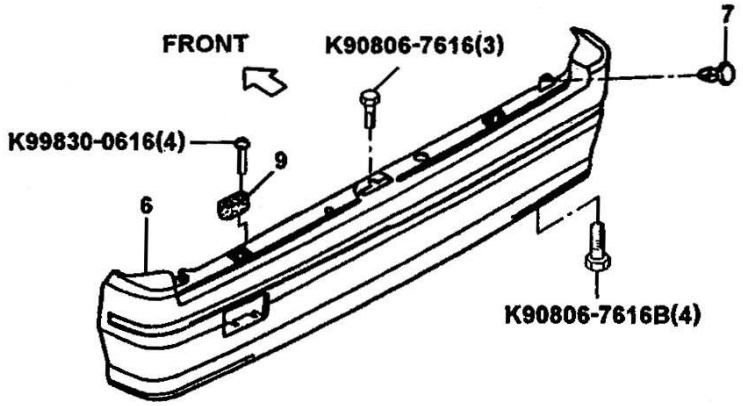

5010 FRONT & REAR BUMPER

NO	PART NAME	PART NUMBER	ALL	TRK	VAN	COH	NOTE
1	FRONT BUMPER	AA100-50-130C	1				STD. DLX
		AA114-50-130C	1				SDX
		AW14-50-130A	1				OPT:EXP
2	NUT	AA100-50-045	2				
3	CLIP	AA100-50-044	2				
4	FRONT BUMPER BRACKET RH	AA100-53-980	1				
5	FRONT BUMPER BRACKET LH	AA100-54-980	1				
6	REAR BUMPER	AA110-50-320B			1	1	DLX
		AA114-50-320B			1	1	SDX
		AAW14-50-320A			1	1	OPT:EXP
7	CLIP	AA110-50-044			2	2	
8	REINFORCEMENT	AA100-50-031	1				
9	BACK DOOR WEDGE	AA110-62-721A			2	2	

5020A HEAD LAMP & FRONT COMBINATION LAMP

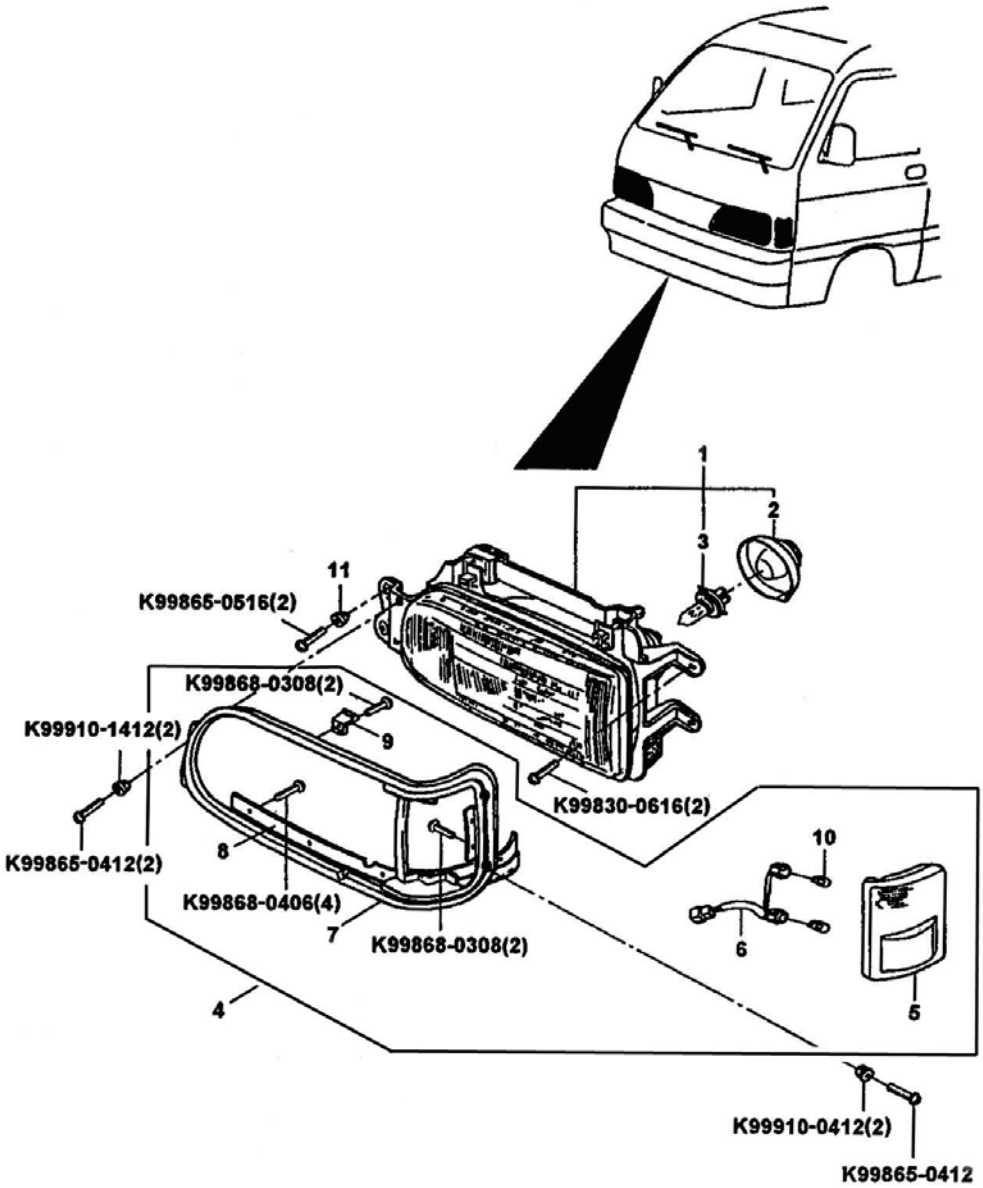

5020A HEAD LAMP & FRONT COMBINATION LAMP

NO	PART NAME	PART NUMBER	ALL	TRK	VAN	COH	NOTE
1	HEAD LAMP RH	AA100-51-030	1				
	HEAD LAMP LH	AA100-51-040	1				
2	DUST COVER	AA100-51-038	1				
3	BULB	K99703-2605	2				12V,60/ 55W
4	FRONT COMBINATION LAMP RH	AA100-51-060A	1				
	FRONT COMBINATION LAMP LH	AA100-51-070B	1				
5	UNIT ASM RH	AA100-51-061	1				
	UNIT ASM LH	AA100-51-071	1				
6	WIRING HARNESS	AA100-51-068	1				
7	BEZEL ASM RH	AA100-51-067	1				
	BEZEL ASM LH	AA100-51-077A	1				
8	GARNISH RH	AA100-51-068	1				
	GARNISH LH	AA100-510-078	1				
9	LOCK PLATE	AA100-51-069	1				
10	BULB	K99701-6050	2				12, 5W
11	SCREW GROMMET	AA100-51-045	4				

5020B FRONT TURN SIGNAL & FOG LAMP

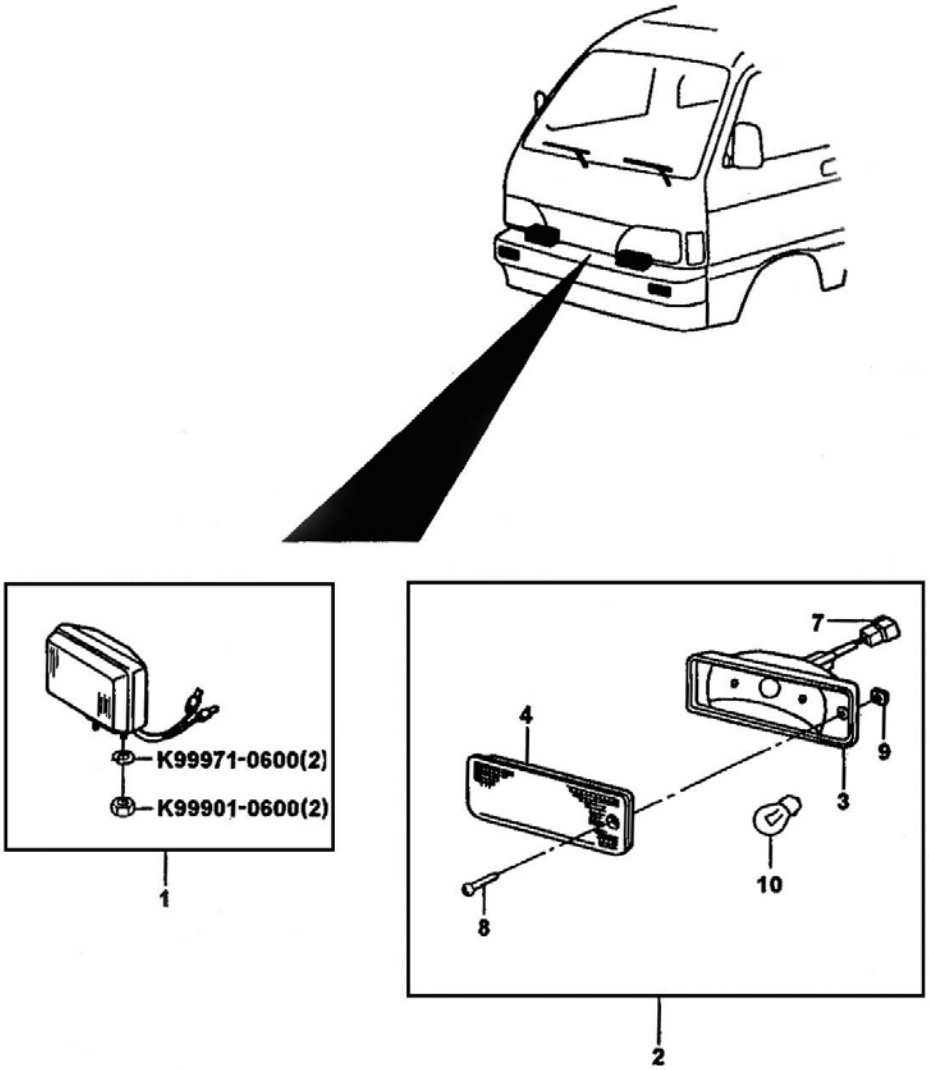

5020B FRONT TURN SIGNAL & FOG LAMP

NO	PART NAME	PART NUMBER	ALL	TRK	VAN	COH	NOTE
1	FOG LAMP	AA114-51-510	2				SDX
2	FRONT TURN SIGNAL LAMP RH	AA100-51-110C	1				
	FRONT TURN SIGNAL LAMP LH	AA100-51-120C	1				
3	BODY RH	AA100-51-111	1				
	BODY LH	AA100-51-121	1				
4	LENS RH	AA100-51-112	1				
	LENS LH	AA100-51-122	1				
7	WIRING HARNESS	AA100-51-115	1				
8	TAPPING SCREW	K99863-0530	1				
9	SPRING NUT	AA100-51-116	2				
10	BULB	K99701-3210	1				12V,21W

TRUCK

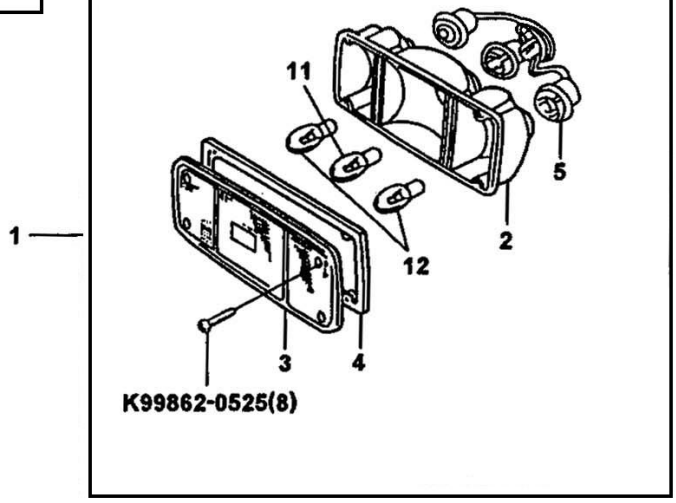

VAN & COACH

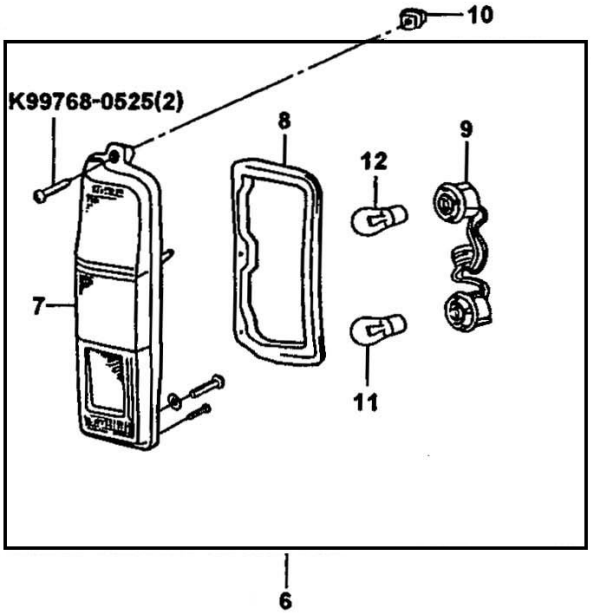

5020C REAR COMBINATION LAMPS

NO	PART NAME	PART NUMBER	ALL	TRK	VAN	COH	NOTE
1	REAR COMBINATION LAMP ASM RH	AA100-51-150B		1			
	REAR COMBINATION LAMP ASM LH	AA100-51-160B		1			
2	BODY RH	AA100-51-152		1			
	BODY LH	AA100-51-162		1			
3	LENS RH	AA100-51-153		1			
	LENS LH	AA100-51-163		1			
4	PACKING	AA100-51-154		1			
5	WIRING HARNESS	AA100-51-155		1			
6	REAR COMBINATION LAMP ASM RH	AA110-51-150A			1	1	
	REAR COMBINATION LAMP ASM LH	AA110-51-160A			1	1	
7	LENS RH	AA110-51-151			1	1	
	LENS LH	AA110-51-161			1	1	
8	PACKING	AA110-51-154			1	1	
9	WIRING HARNESS	AA110-51-156			1	1	
10	SCREW GROMMENT	AA110-51-156			2	2	
11	BULB	K99701-4215	1				12V,21/5W
12	BULB	K99701-3210		2	1	1	12V,21W

5020D LICENSE LAMP

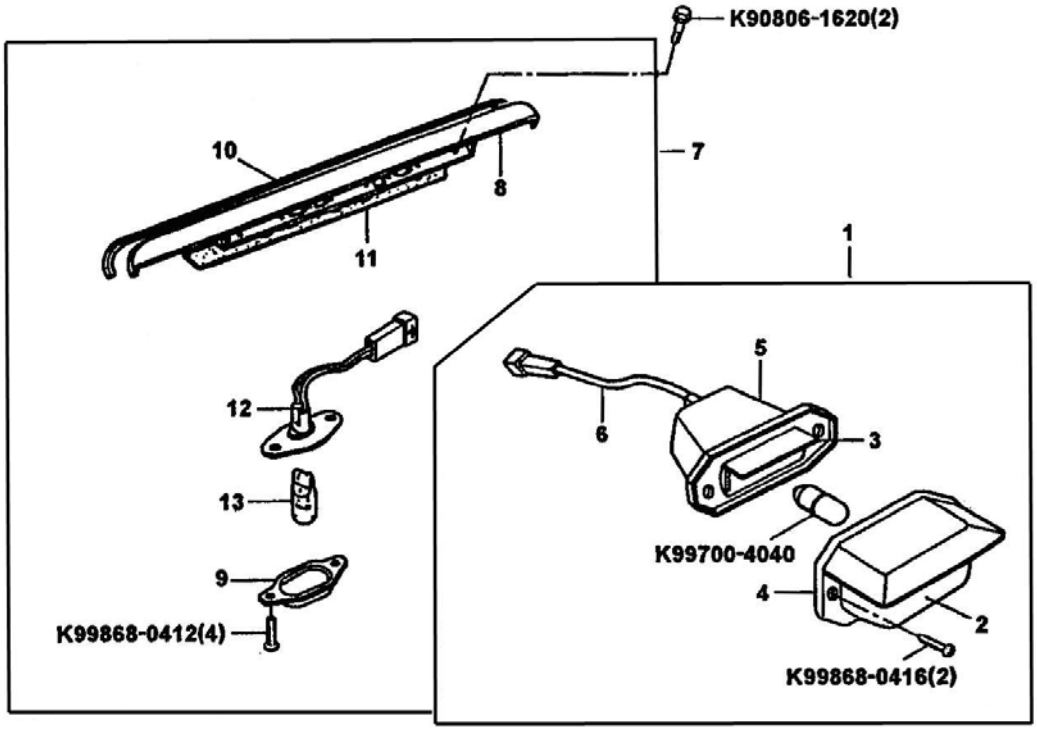

5020D LICENSE LAMP

NO	PART NAME	PART NUMBER	ALL	TRK	VAN	COH	NOTE
1	LICENSE LAMP	AA100-51-270		1			
2	LENS	AA100-51-271		1			
3	BRACKET	AA100-51-272		1			
4	COVER "A"	AA100-51-273		1			
5	COVER "B"	AA100-51-274		1			
6	WIRING HARNESS	AA100-51-275		1			
7	LICENSE LAMP	AA110-51-270C			1	1	
8	GARNISH	AA110-51-271			1	1	
9	LENS	AA110-51-272			2	2	
10	PROTECTOR	AA110-51-273			1	1	
11	PACKING	AA110-51-274B			1	1	
12	SOCKET	AA110-51-275			2	2	
13	BULB	K99701-6050			2	2	12V, 5W

CAB LAMP

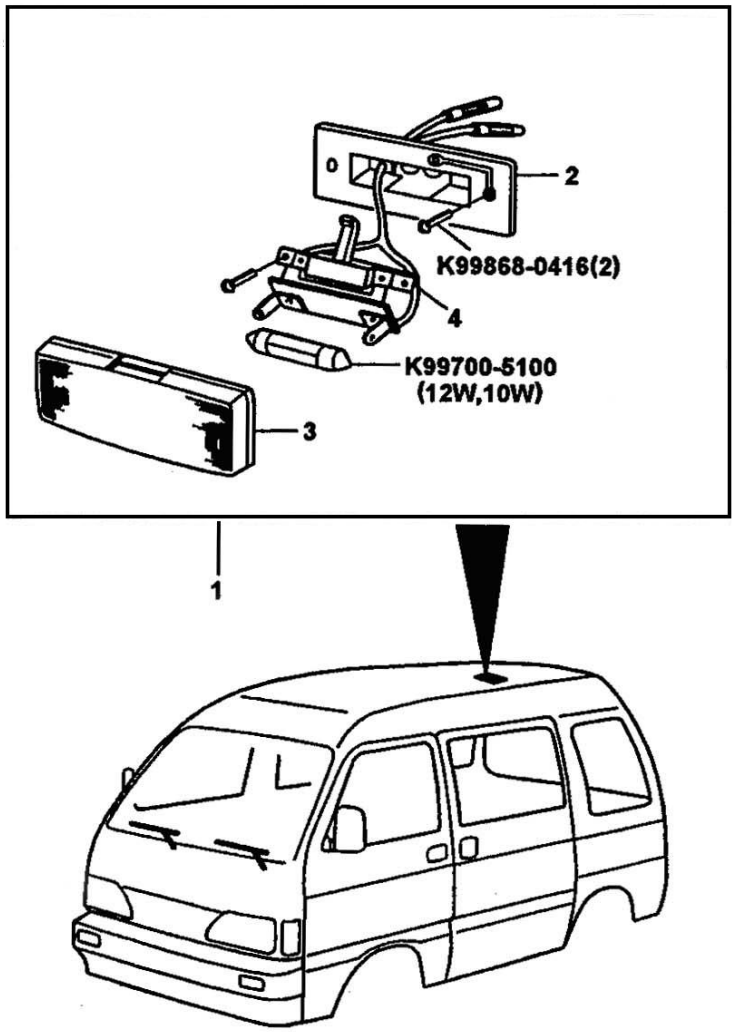

5020E CAB LAMP

NO	PART NAME	PART NUMBER	ALL	TRK	VAN	COH	NOTE
1	CAB LAMP	AA110-51-310A			1	1	
2	BODY ASM	AA110-51-311			1	1	
3	LENS	AA110-51-312			1	1	
4	SWITCH ASM	AA110-51-313			1	1	

BACK-UP LAMP

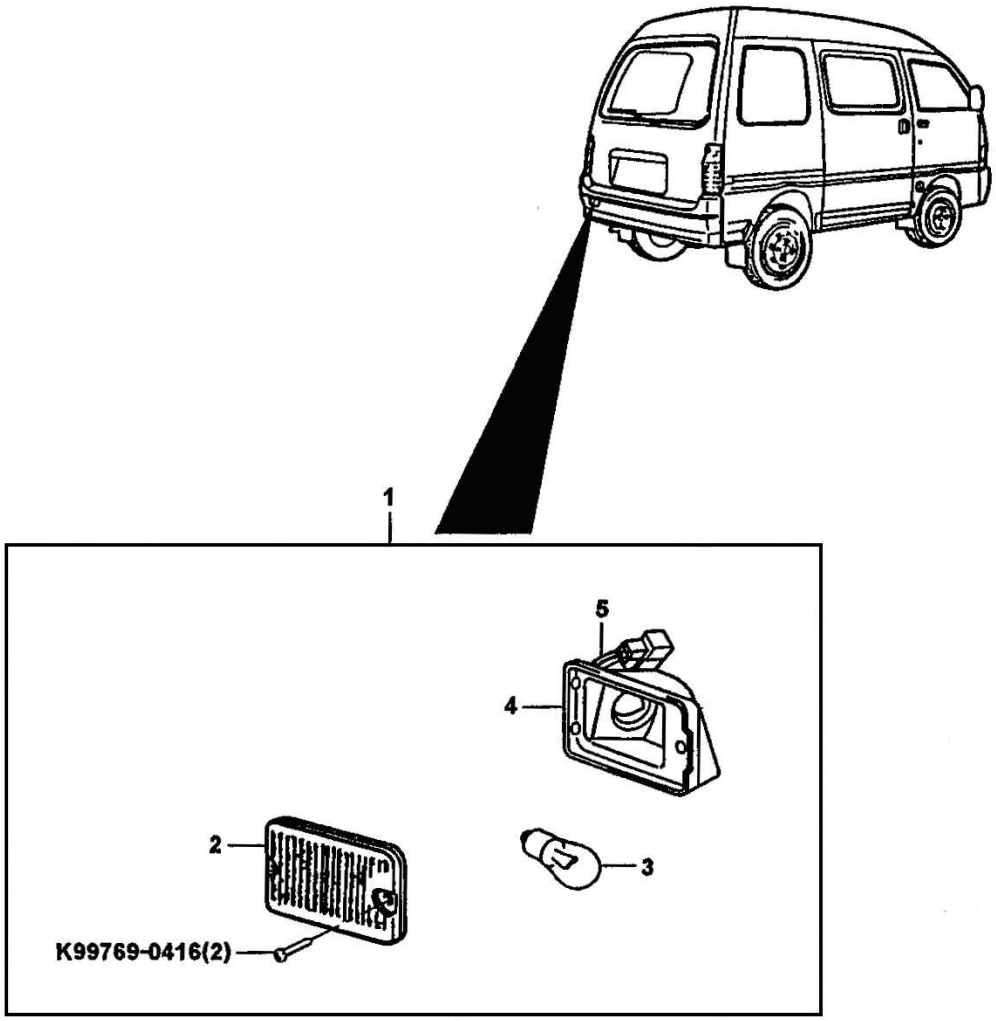

5020F BACK-UP LAMP

NO	PART NAME	PART NUMBER	ALL	TRK	VAN	COH	NOTE
1	BACK-UP LAMP ASM	AA110-51-240C			1	1	
2	LENS	AA110-51-242			1	1	
3	BULB	K99701-3210			1	1	12V, 21W
4	LAMP BODY	AA110-51-241			1	1	
5	SOCKET	AA110-51-243			1	1	

5030A SIDE MOULDING (OPT)

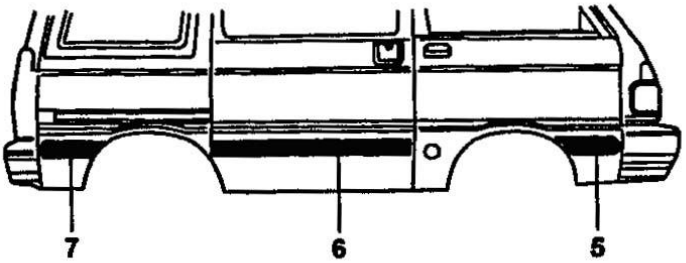

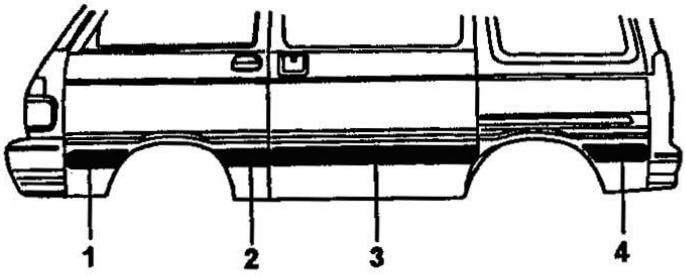

5030A SIDE MOULDING (OPT)

NO	PART NAME	PART NUMBER	ALL	TRK	VAN	COH	NOTE
1	SIDE MOULDING NO.1 LH	AA119-51-681			1		SDX
2	SIDE MOULDING NO.2 LH	AA119-51-682			1		SDX
3	SIDE MOULDING NO.3 LH	AA119-51-683			1		SDX
4	SIDE MOULDING NO.5 LH	AA119-51-685			1		SDX
5	SIDE MOULDING NO.1 RH	AA119-51-691			1		SDX
6	SIDE MOULDING NO.4 RH	AA119-51-694			1		SDX
7	SIDE MOULDING NO.6 RH	AA119-51-696			1		SDX

5030B SIDE STEP (OPT)

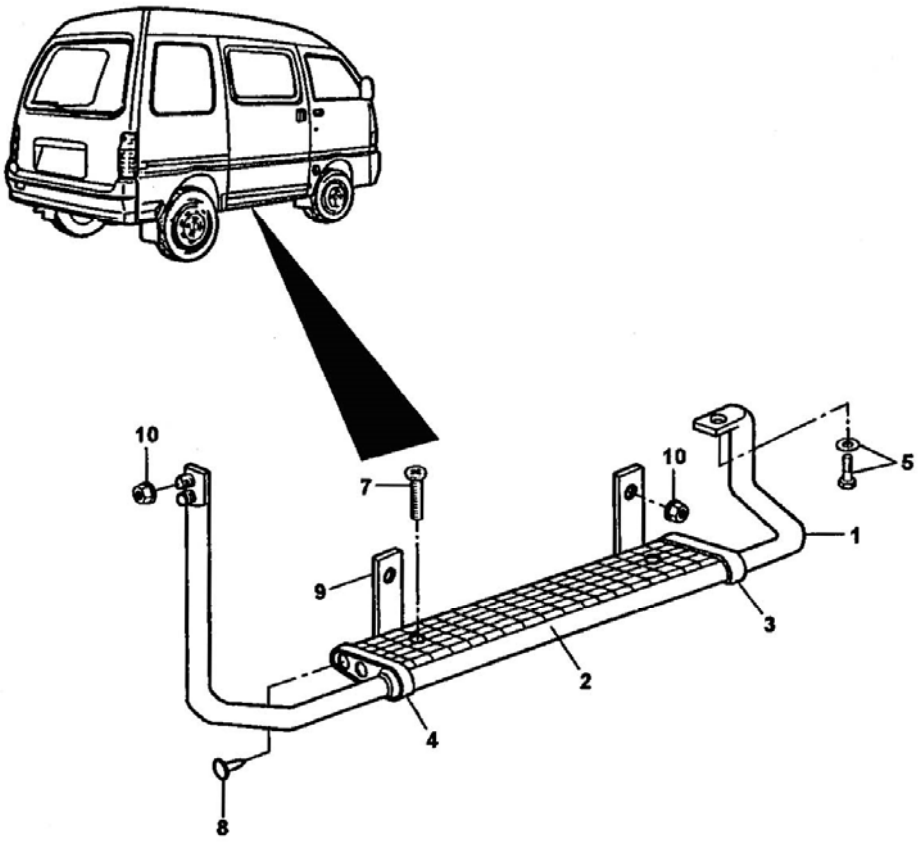

5030B SIDE STEP (OPT)

NO	PART NAME	PART NUMBER	ALL	TRK	VAN	COH	NOTE
1	SUB STEP ASM	AA114-51-540B				1	SDX
2	STEP PLATE	AA114-51-565B				1	
3	FROTN STEP COVER	AA114-51-560A				1	
4	REAR STEP COVER	AA114-51-561A				1	
5	BOLT	K90801-6820				1	
7	SCREW	K99832-0512				2	
8	GROMMETN	AA114-51-590				4	
9	STEP BRACKET	AA114-51-542A				2	
10	NUT	K99940-0800				4	

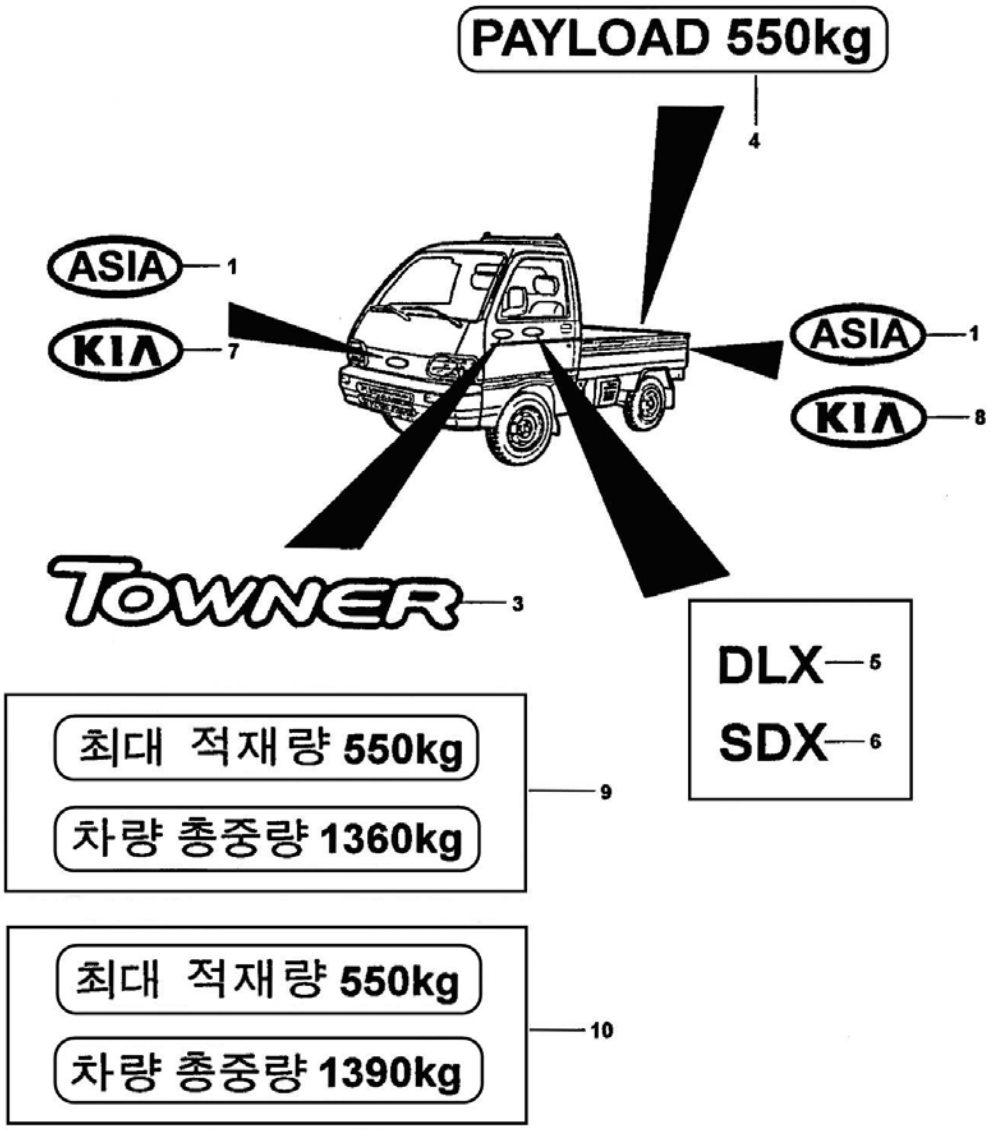
PAYLOAD 550kg
4
ASIA
1
KIA
7
ASIA
1
KIA
8
TOWNER
3
DLX
5
SDX
6
최대 적재량 550kg
차량 총중량 1360kg
9
최대 적재량 550kg
차량 총중량 1390kg
10

5030C ORNAMENTS (TRUCK)

NO	PART NAME	PART NUMBER	ALL	TRK	VAN	COH	NOTE
1	EMBLEM ASIA	AA110-51-732A		2			EXP
2	EMBLEM TOWNER	AA100-51-731B		2			
3	ORNAMENT 550KG	AA100-51-711		1			
		AA100-51-711 PO1		1			EXP
5	EMBLEM DLX	AA101-51-741B		1			DLX
6	EMBLEM SDX	AA114-51-741B		1			SDX
7	EMBLEM KIA	AA301-51-732A		1			
8	EMBLEM KIA	AA105-51-741		1			
9	LABEL	AA103-51-741		1			
10	LABEL	AA13A-51-741		1			LPG

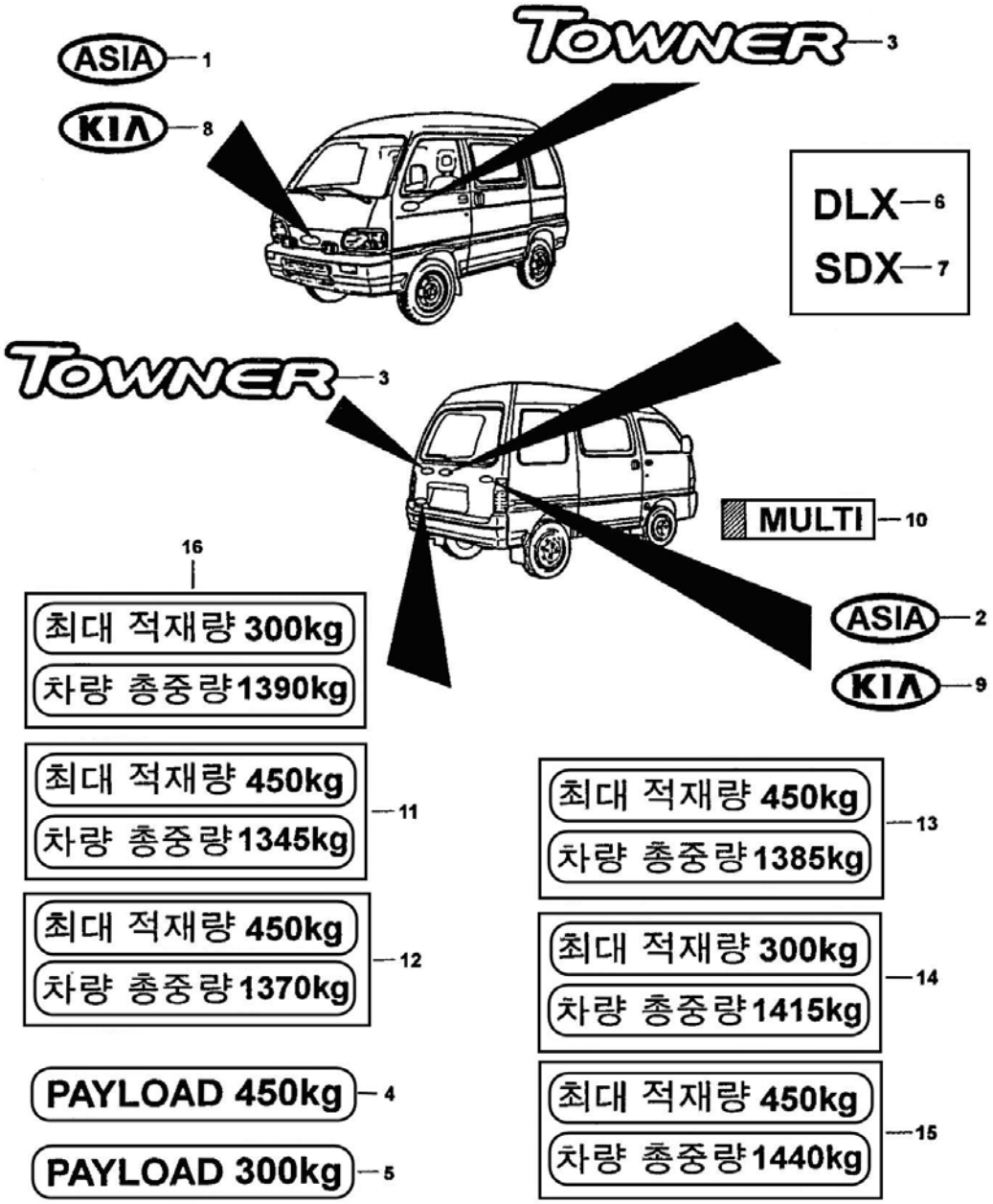
ASIA 1
TOWNER 3
KIA 8
DLX 6
SDX 7
TOWNER 3
MULTI 10
ASIA 2
KIA 9
16
최대 적재량 300kg
차량 총중량 1390kg
최대 적재량 450kg
차량 총중량 1345kg 11
최대 적재량 450kg
차량 총중량 1370kg 12
PAYLOAD 450kg 4
PAYLOAD 300kg 5
최대 적재량 450kg
차량 총중량 1385kg 13
최대 적재량 300kg
차량 총중량 1415kg 14
최대 적재량 450kg
차량 총중량 1440kg 15

5030D ORNAMENTS (VAN-COACH)

NO	PART NAME	PART NUMBER	ALL	TRK	VAN	COH	NOTE
1	EMBLEM ASIA	AA110-51-732A			1	1	EXP
2	EMBLEM ASIA	AA110-51-741D			1	1	EXP
3	EMBLEM TOWNER	AA100-51-731B			3	3	
4	ORNAMENT 450KG	AA111-51-711 PO1			1		EXP: 2VAN
5	ORNAMENT 300KG	AA117-51-711 PO1			1		EXP: 5VAN
6	EMBLEM DLX	AA101-51-741B			1	8	DLX
7	EMBLEM SDX	AA114-51-741B			1	8	SDX
8	EMBLEM KIA	AA301-51-732A			1	1	
9	EMBLEM KIA	AA120-51-741			1	1	
10	EMBLEM MULTI	AA125-51-741A				1	MULTI
11	LABEL	AA111-51-741B			1		2VAN
12	LABEL	AA116-51-741B			1		OPT: 2VAN
13	LABEL	AA131-51-741B			1		LPG: 2VAN
14	LABEL	AA117-51-741B			1		5VAN
15	LABEL	AA118-51-741B			1		OPT: 5VAN
16	LABEL	AA137-51-741B			1		LPG: 5VAN

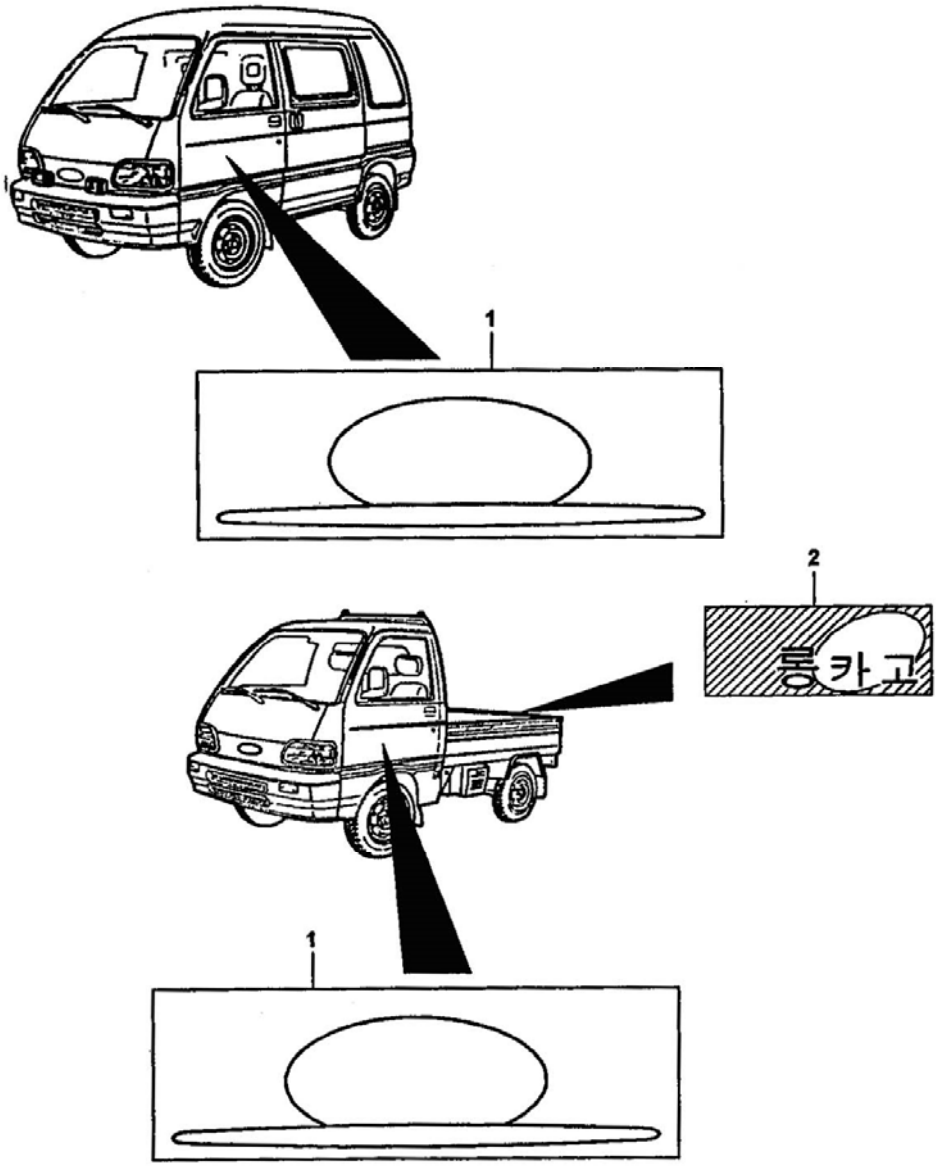
1
2
롱카고
1

5030E ORNAMENTS

NO	PART NAME	PART NUMBER	ALL	TRK	VAN	COH	NOTE
1	DECORATION TAPE LH	AA113-51-722H	1				
2	DECORATION TAPE RH	AA113-51-724H	1				
3	LABEL	AA13F-51-741		1			LONG CARGO

REAR SPOILER

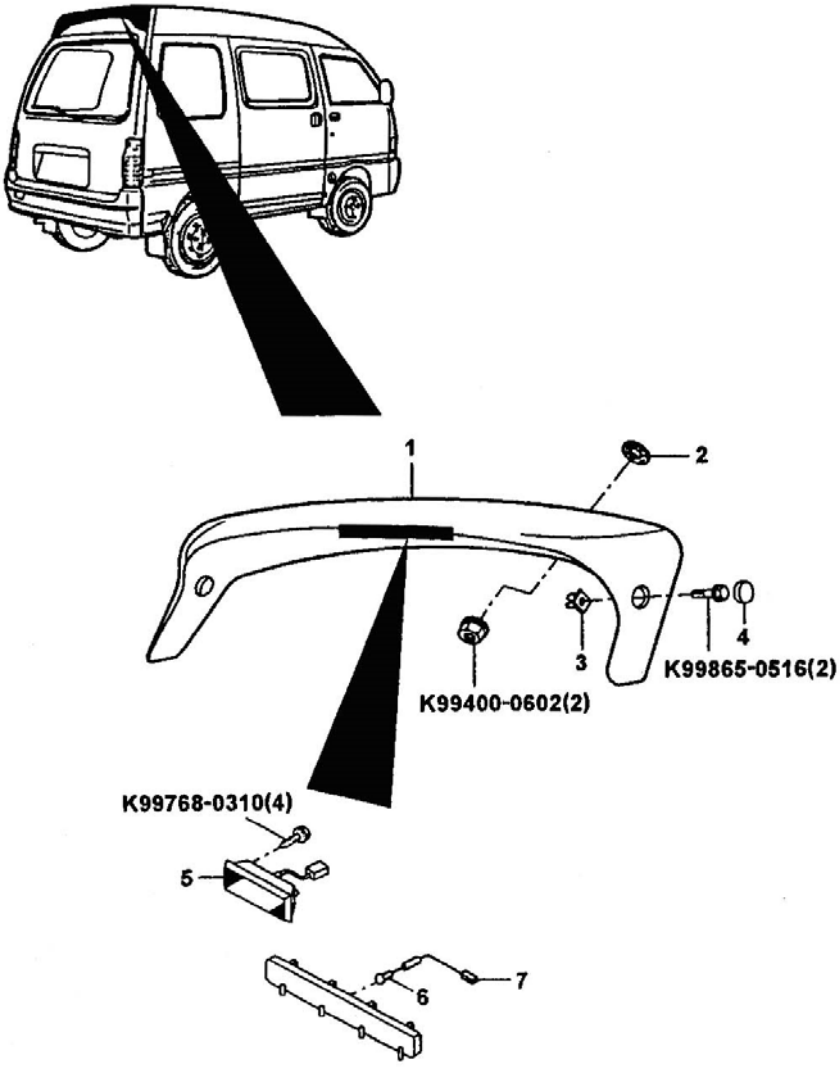

5030F REAR SPOILER

NO	PART NAME	PART NUMBER	ALL	TRK	VAN	COH	NOTE
1	SPOILER SUB ASM	AA150-51-92XA			1	1	SD: OPT MULTI: STD
2	SEAL	AA150-51-926			2	2	SD: OPT MULTI: STD
3	GROMMENT SCREW	K99910-0501			2	2	SD: OPT MULTI: STD
4	CAP	AA150-51-922			2	2	SD: OPT MULTI: STD
5	STOP LAMP (HIGH MOUNT)	KK141-51-580			1	1	SD: OPT MULTI: STD
6	CORD	KK141-51-585			1	1	SD: OPT MULTI: STD

FRONT PANEL

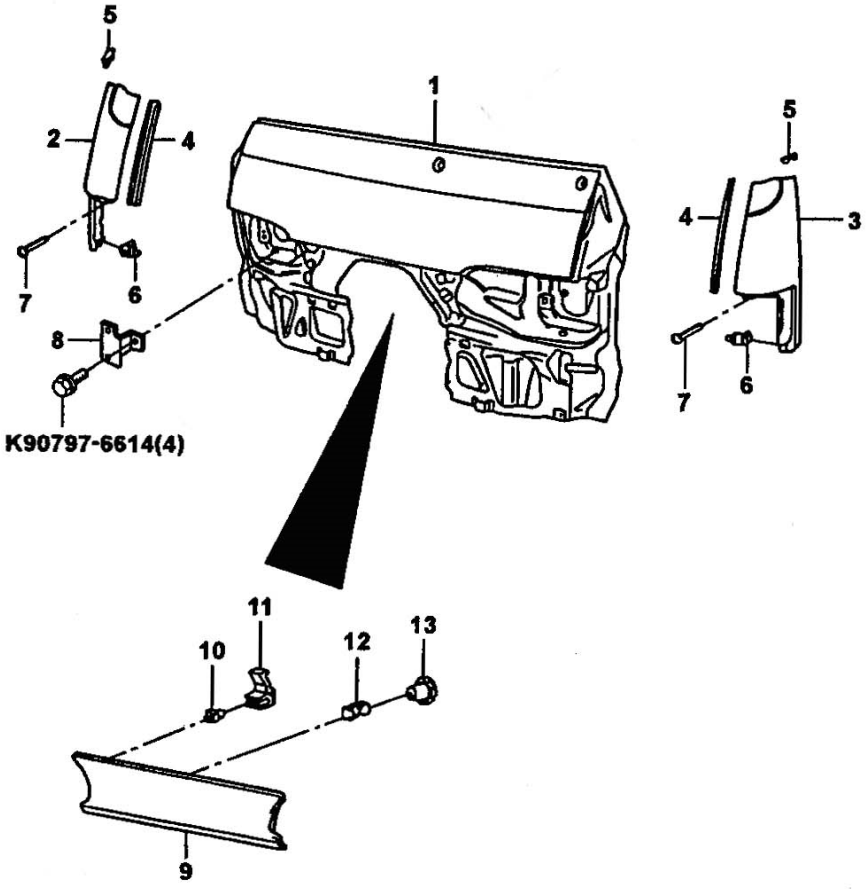

5300A FRONT PANEL

NO	PART NAME	PART NUMBER	ALL	TRK	VAN	COH	NOTE
1	FROTN PANEL SUB ASM	AA100-70-610B		1			
		AA110-70-610A			1	1	
2	FRONT SIDE PANEL RH	AA100-56-911A	1				
3	FRONT SIDE PANEL LH	AA100-56-921A	1				
4	FRONT SID EPANEL NO.2 PROTECTOR	AA100-56-915A	2				
5	FRONT SID EPANEL NO.1 PROTECTOR	AA100-56-916	2				
6	CLIP	AA100-56-867	4				
7	SCREW & WASHER	AA100-56-897A	6				
8	HEAD LAMP BRACKET LH	AA110-71-642	1				
	HEAD LAMP BRACKET RH	AA100-70-632	1				
9	FRONT PANEL CENTER COVER	AA100-56-36X	1				
10	CLIP	AA100-56-884	2				
11	CLIP	AA100-56-885	2				
12	CLIP	AA100-56-868	2				
13	FRONT COVER MOUNTING SCREW	AA100-56-3A3	2				

5300B SIDE PANELS (TRUCK)

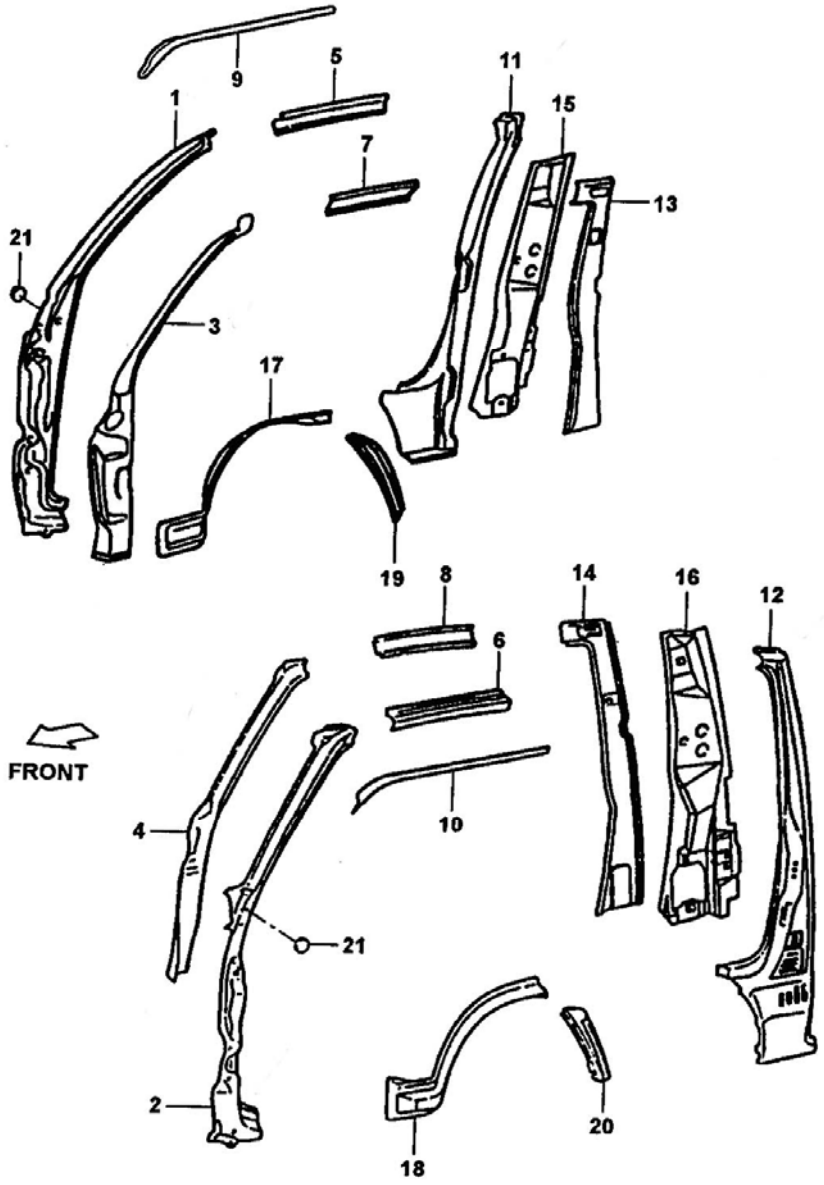

5300B SIDE PANELS (TRUCK)

NO	PART NAME	PART NUMBER	ALL	TRK	VAN	COH	NOTE
1	FRONT BODY OUTER PILLAR SUB ASM RH	AA100-70-210A		1			
2	FRONT BODY OUTER PILLAR SUB ASM LH	AA100-71-210A		1			
3	FRONT BODY INNER PILLAR RH	AA100-70-260B		1			
4	FRONT BODY INNER PILLAR LH	AA100-71-260A		1			
5	ROOF SIDE OUTER RAIL RH	AA100-70-251		1			
6	ROOF SIDE OUTER RAIL LH	AA100-71-251		1			
7	ROOF SIDE INNER RAIL RH	AA100-70-051		1			
8	ROOF SIDE INNER RAIL LH	AA100-71-051		1			
9	ROOF SIDE DRIP CHNNEL RH	AA100-70-311		1			
10	ROOF SIDE DRIP CHNNEL LH	AA100-71-311		1			
11	REAR OUTER PILLAR SUB ASM RH	AA100-70-35XA		1			
12	REAR OUTER PILLAR SUB ASM LH	AA100-71-35XA		1			
13	REAR INNER PILLAER SUB ASM RH	AA100-70-730B		1			
14	REAR INNER PILLAER SUB ASM LH	AA100-71-730B		1			
15	REAR PILLAR UPPER REINFORCEMENT RH	AA100-70-740A		1			
16	REAR PILLAR UPPER REINFORCEMENT LH	AA100-71-740A		1			
17	FENDER PANEL RH	AA100-70-271B		1			
18	FENDER PANEL LH	AA100-71-271B		1			
19	REAR FENDER PANEL RH	AA100-70-272A		1			

5300B SIDE PANELS (TRUCK)

NO	PART NAME	PART NUMBER	ALL	TRK	VAN	COH	NOTE
20	REAR FENDER PANEL LH	AA100-71-282		1			
21	HOLE COVER	AA100-56-246		8			

5300C SIDE PANELS (VAN-COACH)

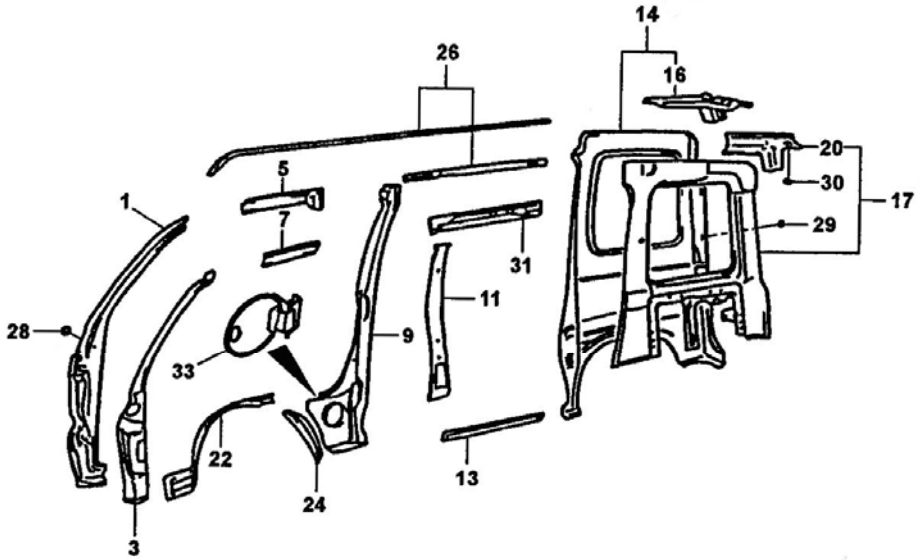

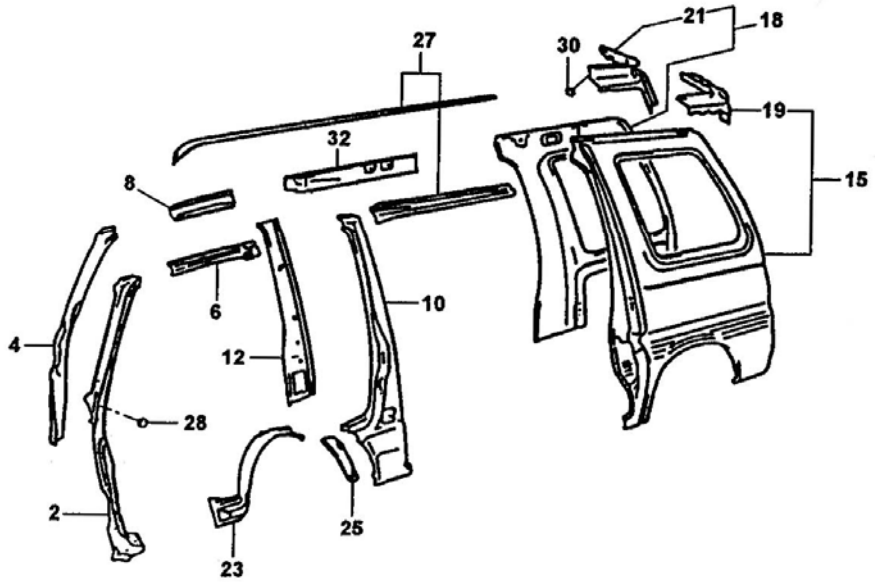

5300C SIDE PANELS (VAN-COACH)

NO	PART NAME	PART NUMBER	ALL	TRK	VAN	COH	NOTE
1	FRONT BODY OUTER PILLAR RH	AA100-70-210A			1	1	
2	FRONT BODY OUTER PILLAR LH	AA100-71-210A			1	1	
3	FRONT BODY INNER PILLAR RH	AA100-70-260B			1	1	
4	FRONT BODY INNER PILLAR LH	AA100-71-260A			1	1	
5	ROOF SIDE OUTER RAIL RH	AA110-70-060			1	1	
6	ROOF SIDE OUTER RAIL LH	AA110-71-060			1	1	
7	ROOF SIDE INNER RAIL RH	AA100-70-051			1	1	
8	ROOF SIDE INNER RAIL LH	AA100-71-051			1	1	
9	CENTER BODY OUTER PILLAR RH	AA110-70-350B			1	1	
10	CENTER BODY OUTER PILLAR LH	AA110-70-350A			1	1	
11	CENTER BODY INNER PILLAR RH	AA110-70-080C			1		
		AA112-70-080B			1	1	2PANEL VAN
12	CENTER BODY INNER PILLAR LH	AA110-71-080A			1		
		AA112-71-080			1	1	2PANEL VAN
13	OUTER ROCKER PANEL	AA110-70-070			1	1	
14	QUARTER PANEL SUB ASM RH	AA110-70-410A			1		PANEL VAN
		AA112-70-410A			1	1	GLASS VAN
15	QUARTER PANEL SUB ASM RH	AA110-71-410A			1		PANEL VAN
		AA112-71-410A			1	1	GLASS VAN
16	QUARTER PANEL REAR EXTENSION RH	AA110-70-110A			1		

5300C SIDE PANELS (VAN-COACH)

NO	PART NAME	PART NUMBER	ALL	TRK	VAN	COH	NOTE
17	QUARTER PANEL REAR EXTENSION RH	AA110-70-110A			1		
		AA117-70-110			1		5PANEL VAN
		AA112-70-110B			1	1	2 PANEL VAN: STD
		AA150-70-110A				1	DLX:SDX :MULTI
18	QUARTER PANEL REAR EXTENSION LH	AA110-71-110A			1		
		AA117-71-110			1		5PANEL VAN
		AA112-71-110A			1	1	2 PANEL VAN: STD
		AA150-71-110A				1	DLX:SDX :MULTI
19	QUARTER PANEL REAR EXTENSION LH	AA110-71-419			1	1	
20	QUARTER PANEL INNER EXTENSION RH	AA110-70-112			1		
		AA112-70-112			1	1	2 PANEL VAN: STD
		AA150-70-112				1	DLX:SDX :MULTI
21	QUARTER PANEL INNER EXTENSION LH	AA110-71-112			1		
		AA112-71-112			1	1	2 PANEL VAN: STD
		AA150-71-112				1	DLX:SDX :MULTI
22	FENDER PANEL RN	AA100-70-271B			1	1	
23	FENDER PANEL LH	AA100-71-271B			1	1	
24	REAR FENDER PANEL RH	AA110-70-272B			1	1	

5300C SIDE PANELS (VAN-COACH)

NO	PART NAME	PART NUMBER	ALL	TRK	VAN	COH	NOTE
25	REAR FNEDER PANEL LH	AA110-71-272			1	1	
26	ROOF SIDE OUTER REAR RAIL RH	AA110-70-320B			1	1	
27	ROOF SIDE OUTER REAR RAIL LH	AA110-71-320B			1	1	
28	HOLE COVER	AA100-56-245			4	4	
29	HOLE COVER	AA110-56-248			4	4	
30	HOLE COVER	AA110-58-924			2	2	
31	INNER RER RAIL RH	AA110-70-082A			1	1	
32	INNER RER RAIL LH	AA110-71-082A			1	1	
33	FUEL LID ASM	AA110-70-710A			1	1	

VAN & COACH

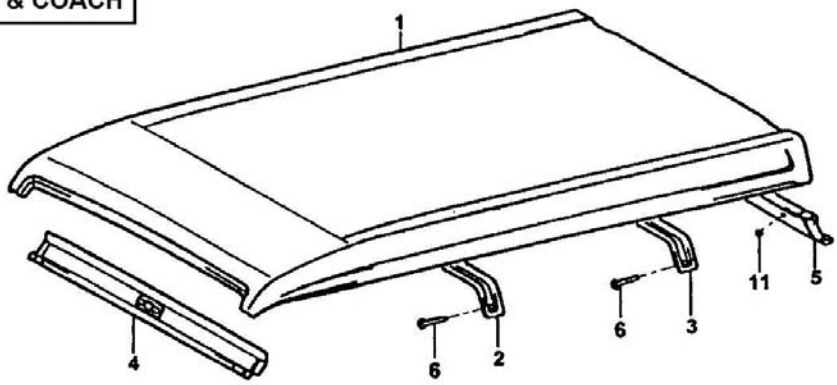

TRUCK

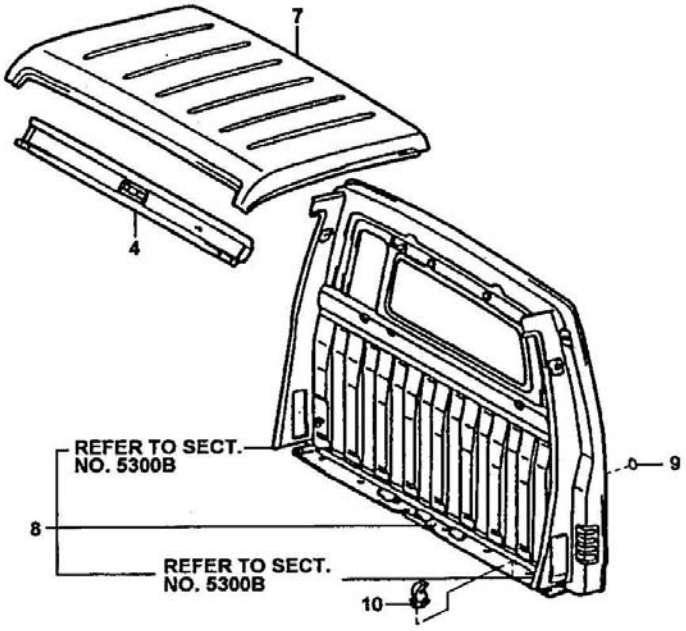

5300D ROOF PANELS

NO	PART NAME	PART NUMBER	ALL	TRK	VAN	COH	NOTE
1	ROOF PANEL	AA110-70-600A			1	1	
		AA143-70-600 P12				1	TRAV. CASH BOX
2	ROOF PANEL NO.1 REINFORCEMENT	AA110-52-670B			1	1	
3	ROOF PANEL NO.2 REINFORCEMENT	AA110-52-680C			1	1	
4	WINDSHIELD HEADER INNER PANEL	AA100-70-660		1	1	1	
		AA150-70-660			1	1	COACH: DLX,SDX
5	BACK DOOR UPPER FRAME	AA110-70-670			1	1	
		AA150-70-670			1	1	COACH: DLX,SDX
6	SCREW	AA100-56-898A			4	4	
7	ROOF PANEL	AA100-70-600		1			
8	PACKAGE ASM	AA101-70-500E		1			
9	HOLE PLUG	AA100-56-054		2			
10	JACK LEVER CLIP	AA100-56-190		1			
11	HOLE PLUG	AA110-56-247			8	8	

5300E FRONT FLOOR PANEL (TRUCK)

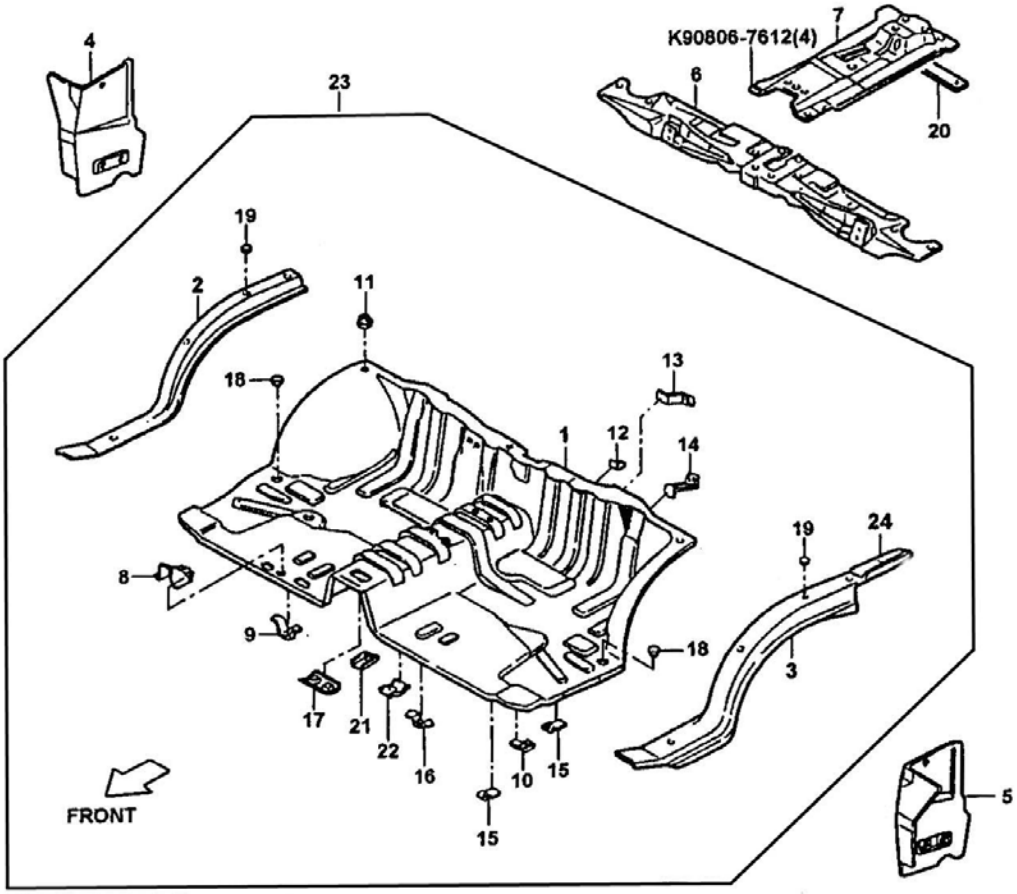

5300E FRONT FLOOR PANEL (TRUCK)

NO	PART NAME	PART NUMBER	ALL	TRK	VAN	COH	NOTE
1	FRONT FLOOR PANEL	AA100-53-041C		1			
2	FLOOR SIDE MEMBER RH	AA100-53-023A		1			
3	FLOOR SIDE MEMBER LH	AA100-54-023A		1			
4	FROTN FLOOR SIDE PANEL RH	AA100-53-301A		1			
5	FORNT FLOOR SIDE PANEL LH	AA100-54-301B		1			
6	FRONT FLOOR CROSS MEMBER SUB ASM	AA100-53-160E		1			
7	SEAT RISER CENTER MEMBER	AA100-56-014D		1			
8	STEERING COLUMN BRACKET	AA100-53-019		1			
9	3-WAY ATTACHING BRACKET	AA100-53-018		1			
10	TUBE CLAMP NO.2 BRACKET	AA100-53-012		1			
11	MALE HOOK	AA100-53-044		4			
12	HEATER CLAMP BRACKET	AA100-53-042		1			
13	WASHER TANK BRACKET	AA100-53-017		1			
14	WASHER TANK NOUNTING BRACKET	AA100-53-015		1			
15	TUBE CLAMP BRACKET	AA100-53-011		1			
16	HEATER HOSE MOUNTING PLATE	AA100-53-061		1			
17	HEATER CONTROL SUPPORT PLATE	AA100-53-021		1			
18	HOLE PLUG	AA100-56-215		2			
19	HOLE COVER	AA100-56-244		4			
20	SEAT MEMBER SEAL	AA100-56-215		1			
21	COOLER MOUNTING NO.1 BRACKET	AA100-53-060		1			
22	COOLER MOUNTING NO.2 BRACKET	AA100-53-022		2			

5300E FRONT FLOOR PANEL (TRUCK)

NO	PART NAME	PART NUMBER	ALL	TRK	VAN	COH	NOTE
23	FRONT FLOOR PANEL SUB ASM	AA100-53-040C		1			
24	HEATER UPPER REINFOREMENT LH	AA13A-54-030A		1			

5300F FRONT FLOOR PANEL (VAN-COACH)

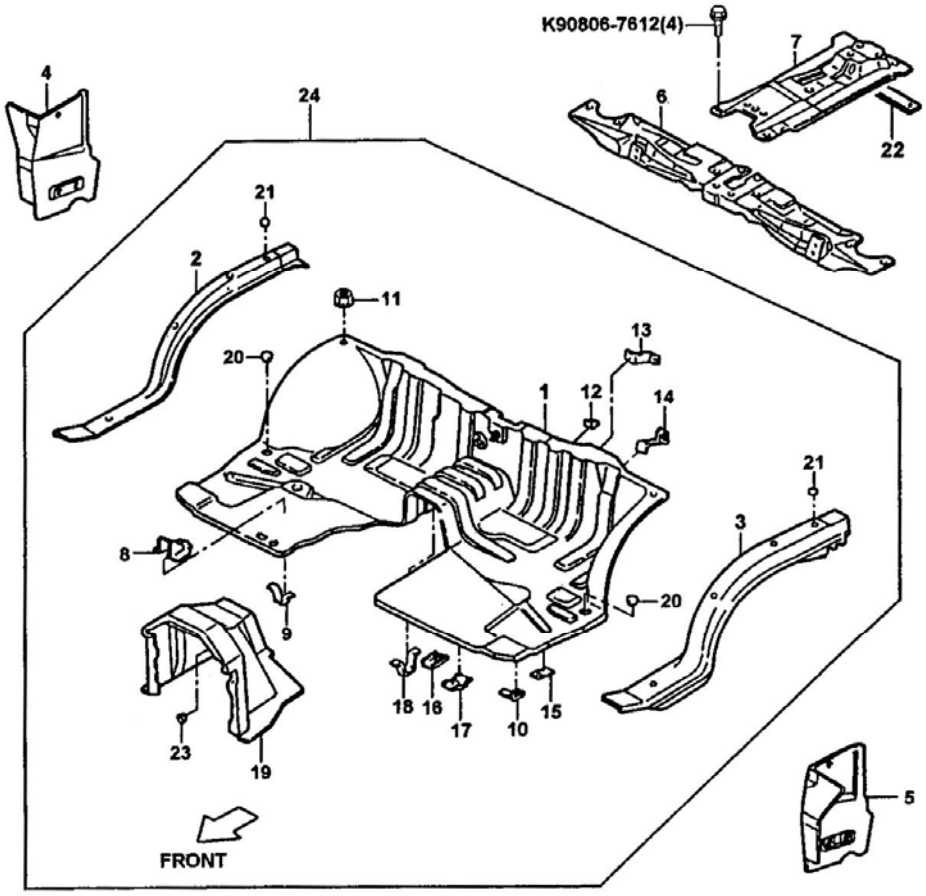

5300F FRONT FLOOR PANEL (VAN-COACH)

NO	PART NAME	PART NUMBER	ALL	TRK	VAN	COH	NOTE
1	FRONT FLOOR PANEL	AA110-53-041C			1	1	
2	FLOOR SIDE MEMBER RH	AA100-53-023A			1	1	VAN:DLX COACH: STD
		AA150-53-048A			1	1	VAN:DLX COACH: STD
3	FLOOR SIDE MEMBER LH	AA100-54-023A			1	1	VAN:DLX COACH: STD
		AA150-54-048A			1	1	VAN:DLX COACH: STD
4	FRONT FLOOR SIDE PANEL RH	AA100-53-301A			1	1	
5	FRONT FLOOR SIDE PANEL LH	AA100-54-301B			1	1	
6	FRONT FLOOR CROSS MEMBER SUB ASM	AA100-53-160E			1	1	
7	SEAT RISER CENTER MEMBER	AA100-56-014D			1	1	
8	STEERING COLUMN BRACKET	AA100-53-019			1	1	
9	3-WAY ATTACHING BRACKET	AA100-53-018			1	1	
10	TUBE CLAMP NO.2 BRACKET	AA100-53-012			1	1	
11	MALE HOOK	AA100-53-044			2	2	
12	HEATER CLAMP BRACKET	AA100-53-042			1	1	
13	WASHER TANK BRACKET	AA100-53-017			1	1	
14	WASHER TANK MOUNTING BRACKET	AA100-53-015			1	1	
15	TUBE CLAMP BRACKET	AA100-53-011			1	1	
16	COOLER MOUNTING NO.1 BRACKET	AA110-53-050			1	1	
17	COOLER MOUNTING NO.2 BRACKET	AA110-53-022			1	1	

5300F FRONT FLOOR PANEL (VAN-COACH)

NO	PART NAME	PART NUMBER	ALL	TRK	VAN	COH	NOTE
18	CHARCOAL CANISTER BRACKET	AA110-53-014			1	1	
19	SUB FLOOR PANEL	AA110-53-049C			1	1	
20	HOLE PLUG	AA100-56-241			2	2	
21	HOLE COVER	AA100-56-244			6	6	
					10		2P/VAN
22	SEAL	AA100-56-215			1	1	
23	HOLE NO.1 COVER	AA100-56-245			1	1	
24	FRONT FLOOR PANEL SUB ASM	AA110-53-040B			1	1	VAN:DLX COACH: STD
		AA150-53-040B			1	1	VAN:DLX COACH: STD

5300G REAR FLOOR PANEL

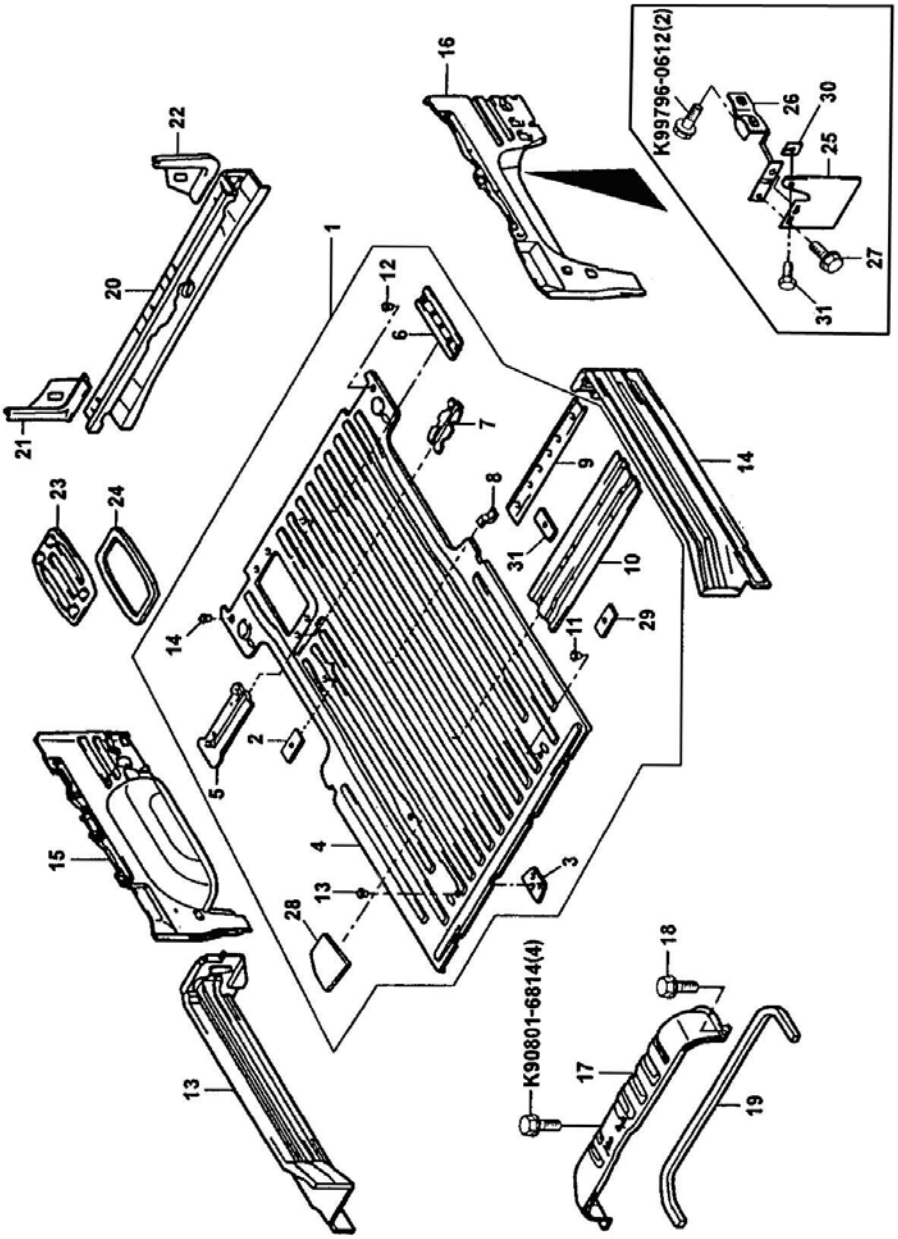

5300G REAR FLOOR PANEL

NO	PART NAME	PART NUMBER	ALL	TRK	VAN	COH	NOTE
1	REAR FLOOR PANEL SUB ASM	AA110-53-700C			1		
		AA112-53-700L				1	STD
		AA123-53-700B			1		5PANEL VAN: 5COH DLX, SDX
		AA113-53-700L				1	DLX,SDX
		AA175-53-700C				1	MULTI
		AA143-53-700P12				1	CASH BOX
		AA112-53-700H12				1	DLX, SDX
2	REAR SEAT MOUNTING BRACKET	AA112-53-718[a]				2	
3	REAR SEAT SET BRACKET PLATE RH	AA110-53-711C			2	1	SDX, SDX
						2	STD, 5COH
		AA113-53-711B				1	7COH: DLX, SDX
4	REAR FLOOR PANEL	AA110-53-710K			1		2VAN: DLX, SLX
		AA112-53-710K				1	7COH
		AA123-53-710D			1	1	5VAN, COH: DLX, SDX
		AA175-53-710C				1	MULTI
		AA143-53-710P12				1	CASH BOX
5	BATTERY HOLE REINFORCEMENT	AA110-53-714			1	1	
6	REAR FLOOR PLATE	AA110-53-715A			1	1	
7	S.T.C. BRACKET SUB ASM	AA110-53-716B			1	1	
8	INSULATOR BRACKET	AA100-53-452			1	1	

5300G REAR FLOOR PANEL

NO	PART NAME	PART NUMBER	ALL	TRK	VAN	COH	NOTE
9	REAR CROSS MEMBER	AA110-53-717			1	1	
10	REAR LOOR PLATE	AA110-53-715A			1	1	
11	HOLE PLUG	AA110-56-242			2	2	
12	HOLE PLUG	AA110-58-922			2	2	
13	FLOOR SIDE RAIL S/A RH	AA110-53-730			1	1	
		AA114-53-730A			1	1	SDX
14	FLLOR SIDE RAIL S/A LH	AA110-54-730			1	1	
15	FLOOR SIDE RAIL S/A RH	AA112-53-540				1	7COH: SDX
		AA117-54-540			1	1	5VAN, COH: DLX, SDX
	REAR FLOOR SIDE PANEL RH	AA112-53-541				1	4COH: SDX
		AA117-54-540			1	1	5VAN, COH: DLX, SDX
16	REAR FLOOR SIDE PANEL S/A LH	AA112-53-540				1	7COH: SDX
		AA117-54-540			1	1	5VAN, COH: DLX, SDX
	REAR FLOOR SIDE PANEL LH	AA112-54-541			1		7COH: SDX
		AA112-54-541			1		5VAN, COH: DLX, SDX
17	ENGINE SERVICE HOLE COVER	AA110-56-200			1	1	5VAN, COH: DLX, SDX
18	BOLT	D91521-40612			4	4	
19	ENGINE COVER PACKING	AA110-56-472			1	1	
20	REAR CORSS OUTER MEMBER	AA110-53-900A			1	1	

5300G REAR FLOOR PANEL

NO	PART NAME	PART NUMBER	ALL	TRK	VAN	COH	NOTE
21	FLOOR SIDE REAR PANEL RH	AA110-53-560			1	1	
22	FLOOR SIDE REAR PANEL LH	AA110-54-560			1	1	
23	BATTERY HOLE COVER	AA110-56-010			1	1	
24	BATTERY HOLE COVER PACKING	AA110-56-615			1	1	
25	REAR FLAP	AA100-51-871		2			
		AA110-51-871E			2	2	W/O COH: SDX
	REAR FLAP LH	AA114-51-961			1	1	SDX
	REAR FLAP RH	AA114-51-971A			1	1	SDX
26	REAR FLAP BRACKET RH	AA110-51-872B			1	1	
	REAR FLAP BRACKET LH	AA110-51-882B			1	1	
27	BOLT & WASHER	AA100-51-893			2	2	
28	SEAT MOUNT BRACKET ASM	AA112-53-760				1	STD
29	SEAT MOUNT BRACKET	AA113-53-720A				2	STD
						3	DLX, SDX
		AA123-53-720A			2	2	5VAN, COH: DLX, SDX
30	NUT	AA100-50-045			2	2	
31	BOLT & WASHER	AA100-56-893			2	2	

5300H FRONT FLOOR FRAME (TRUCK)

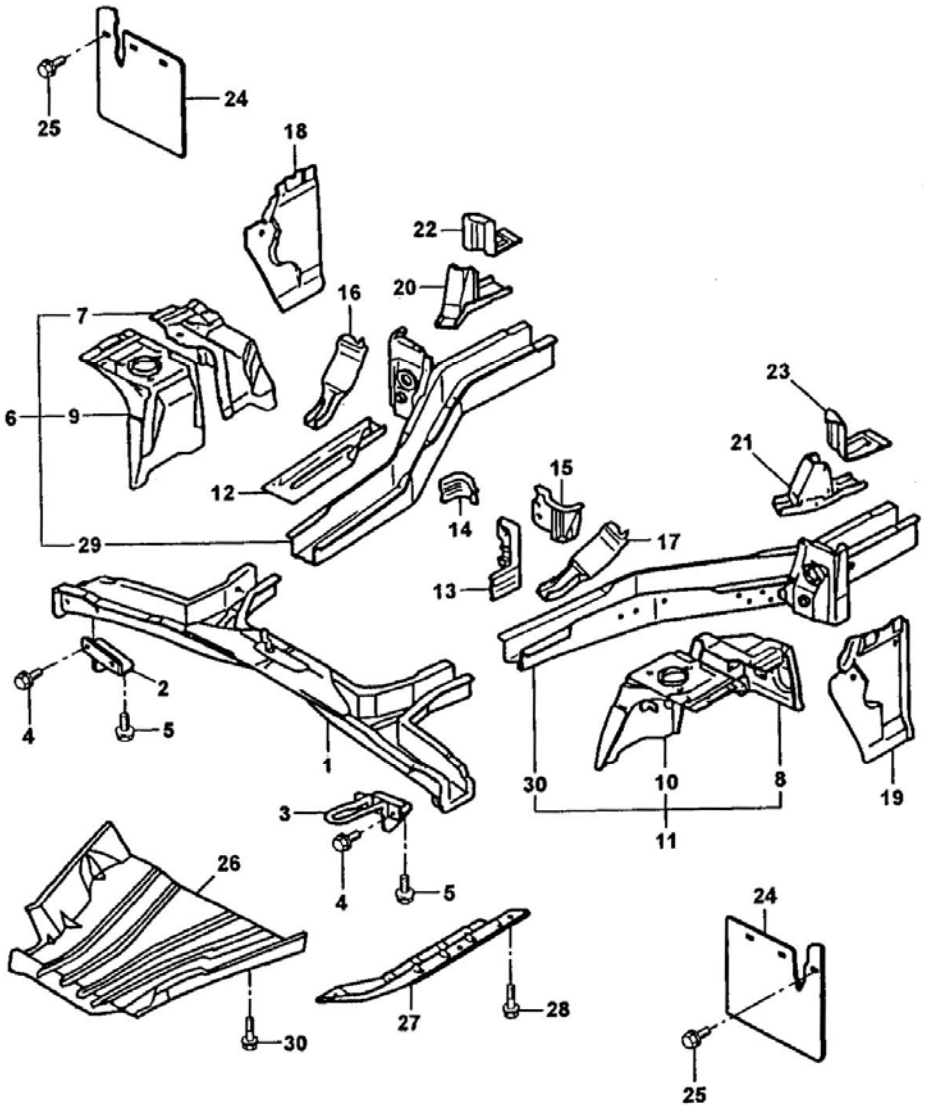

5300H FRONT FLOOR FRAME (TRUCK)

NO	PART NAME	PART NUMBER	ALL	TRK	VAN	COH	NOTE
1	FROTN CROSS MEMBER	AA100-53-2200		1			
2	FRONT HOOK SUB ASM RH	AA100-53-390		1			
3	FRONT HOOK SUB ASM LH	AA100-54-390		1			
4	BOLT & WASHER	D91651-40820		5			
5	BOLT & WASHER	D91661-40820		4			
6	FRONT SIDE FRAME RH	AA100-53-20YC		1			
		AA16B-53-20Y		1			LPG
		AW101-53-20Y		1			MPI
7	FENDER APRON RH	AA100-53-151F		1			
8	FENDER APRON LH	AA100-54-151D		1			
9	SPRING SUPPORT REINFORCEMENT RH	AA100-53-170A		1			
10	SPRING SUPPORT REINFORCEMENT LH	AA100-54-170		1			
11	FRONT SID EFRAME LH	AA100-54-20YE		1			LPG
		AA16B-54-20YA		1			LPG
12	SIDE FRAME PLATE NO.1	AA110-53-305		1			
13	RADIATOR SUPPORT BRACKET LH	AA100-54-330		1			
14	RADIATOR SUPPORT BRACKET RH	AA16B-53-330		1			LPG
15	HOT ARI SIDE SHUTTER LH	AA100-53-321A		1			
16	SIDE FRAME PLATE NO.2 RH	AA100-53-340D		1			
		AA145-53-340		1			LPG
17	SIDE FRAME PLATE NO.2LH	AA100-54-340E		1			
18	CENTER INNER LOWER PILLAR RH	AA100-53-570E		1			
		AA13B-53-570D		1			LPG

5300H FRONT FLOOR FRAME (TRUCK)

NO	PART NAME	PART NUMBER	ALL	TRK	VAN	COH	NOTE
19	CENTER INNER LOWER PILLAR LH	AA100-54-570A		1			
		AA16B-54-570		1			LPG
20	BODY SUPPORT NO.1 RH	AA100-53-410B		1			
21	BODY SUPPORT NO.1 RH	AA100-54-410		1			
22	BODY SUPPORT PLATE NO.1 RH	AA100-53-421		1			
		AA13B-53-421		1			LPG
23	BODY SUPPORT PLATE NO.1 LH	AA100-54-421		1			
24	FRONT FLAP	AA100-51-841E		2			
25	BOLT & WASHER	AA100-53-893		4			
26	ENGINE LOWER COVER	AA100-56-016		1			
27	ENGINE SIDE UNDER COVER LH	AA110-56-017		1			
28	BOLT & WASHER	AA100-56-891		5			
29	FRONT SIDE FRAME RH	AA100-53-110E		1			
		AA16B-53-110B		1			LPG
27	FRONT SIDE FRAME RH	AA100-54-110C		1			
		AA16B-54-110A		1			LPG

5300I FRONT FLOOR FRAME (VAN-COACH)

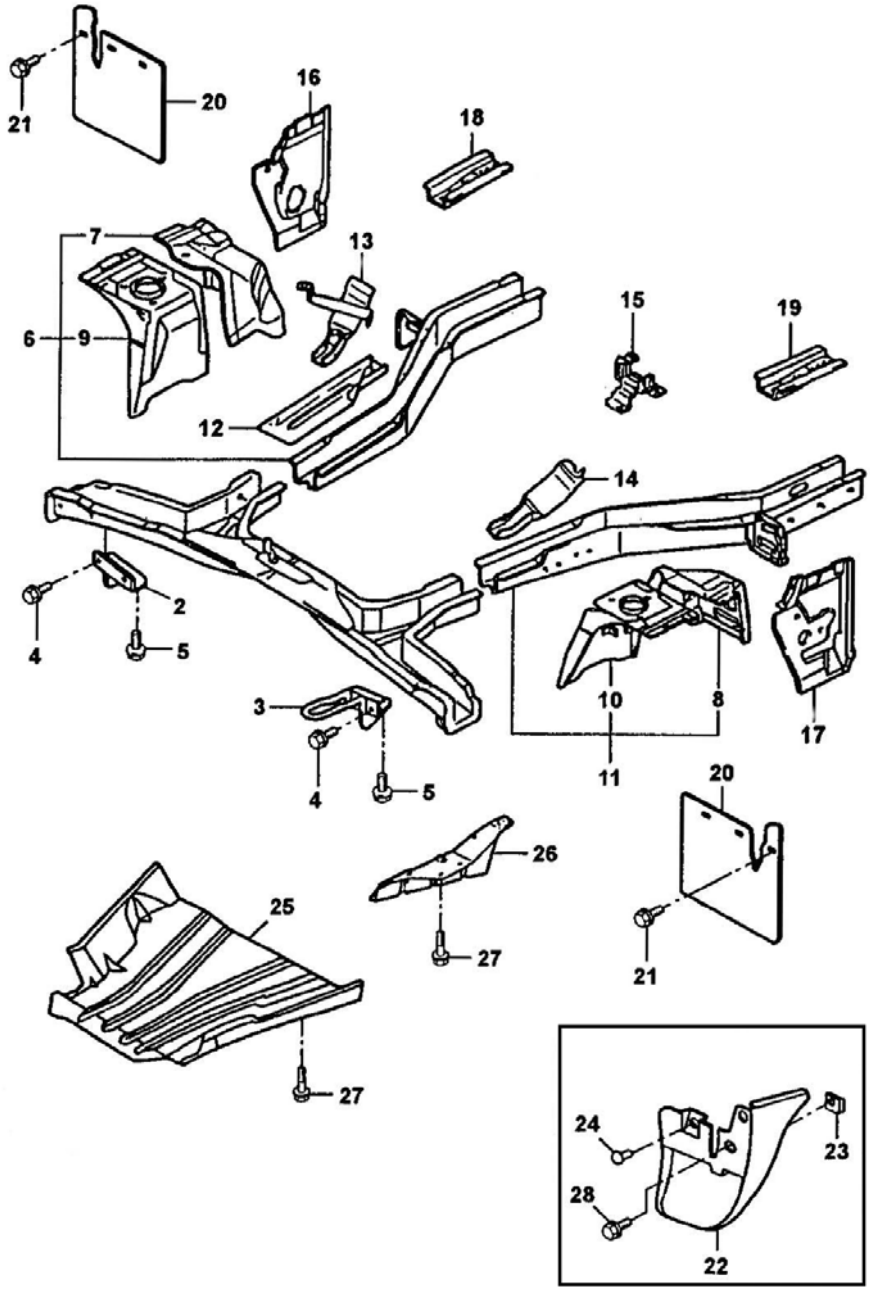

5300I FRONT FLOOR FRAME (VAN-COACH)

NO	PART NAME	PART NUMBER	ALL	TRK	VAN	COH	NOTE
1	FRONT CROSS MEMBER	AA100-53-200			1	1	
2	FRONT HOOK SUB ASM RH	AA100-53-390			1	1	EXP
3	FRONT HOOK SUB ASM LH	AA100-54-390			1	1	
4	BOLT & WASHER	D91651-40820			5	5	EXP
5	BOLT & WASHER	D91661-40820			3	3	
6	FRONT SIDE FRAME RH	AA110-53-20YB			1	1	
		AA131-53-20YA			1	1	LPG
7	FENDER APRON RH	AA100-53-151F			1	1	
8	FENDER APRON LH	AA100-54-151D			1	1	
9	SPRING SUPPORT REINFORCEMENT RH	AA100-53-170A			1	1	
10	SPRING SUPPORT REINFORCEMENT RH	AA100-54-170			1	1	
11	FRONT SIDE FRAME LH	AA100-54-170			1	1	
		AA161-54-20Y			1	1	LPG
12	SIDE FRAME PLATE NO.1	AA110-53-305			1	1	
13	SIDE FRAME PLATE NO.2 RH	AA110-53-582B			1	1	
14	SIDE FRAME PLATE NO.2 LH	AA110-54-582A			1	1	
15	JACK SUPPORT ASM	AA110-56-070			1		2VAN
		AA131-56-070A			1	1	LPG: 5VAN
16	CENTER INNER LOWER PILLAR RH	AA110-53-570B			1	1	
17	CENTER INNER LOWER PILLAR LH	AA110-54-570A			1	1	
		AA161-54-570A			1	1	LPG
18	FRONT FRAME UP. REINFORCEMTN RH	AA110-53-550			1	1	
19	FRONT FRAME UP. REINFORCEMTN RH	AA110-54-550			1	1	

5300I FRONT FLOOR FRAME (VAN-COACH)

NO	PART NAME	PART NUMBER	ALL	TRK	VAN	COH	NOTE
20	FRONT FLAP	AA110-53-841D			2	2	W/O COH: SDX
21	BOLT & WASHER	AA100-51-893			4	4	W/O COH: SDX
22	FRONT FLAP LH	AA114-51-951D			1	1	SDX: MULTI
	FRONT FLAP LH	AA114-51-951D			1	1	SDX: MULTI
23	NUT	AA100-51-045			4	4	SDX: MULTI
24	BOLT & WASHER	AA100-51-893			4	4	SDX: MULTI
25	ENGINE SIDE UNDER COVER NO.1	AA16B-56-033C			1	1	
26	ENGINE SIDE UNDER COVER LH	AA110-56-017			1	1	
27	BOLT & WASHER	K90805-7616			7	7	
28	FASTENER	AA114-51-943			1	1	SDX, VAN EXP: OPT

5300J REAR FLOOR FRAME

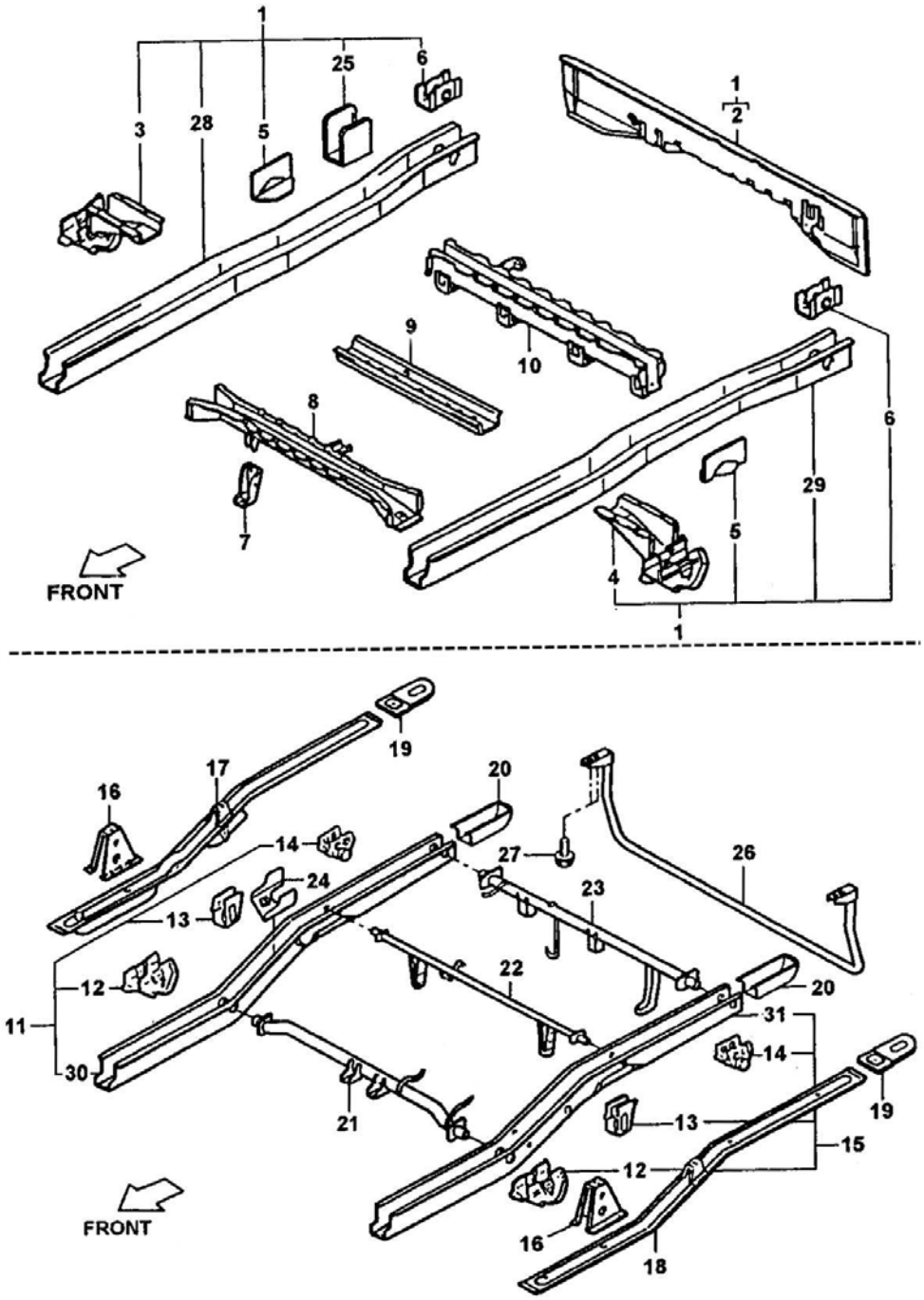

5300J REAR FLOOR FRAME

NO	PART NAME	PART NUMBER	ALL	TRK	VAN	COH	NOTE
1	REAR SUB FRAME ASM	AA110-53-800			1	1	DLX,SDX W/O 5VAN
		AA112-53-800				1	7COH: STD
		AA162-53-800				1	LPG: STD
		AA161-53-800			1	1	LPG: DLX, SDX
		AA117-53-800A			1		VAN
		AA125-53-800A				1	MULTI
		AA175-53-800A				1	LPG: MULTI
2	REAR FLOOR MEMBER SUB ASM	AA110-53-860			1	1	
3	REAR SPRING FRONT BRACKET RH	AA110-53-819B			1	1	
4	REAR SPRING FRONT BRACKET RH	AA110-54-819B			1	1	
5	RR SPRING BUMPER REINFORCEMENT	AA110-53-818			2	2	
6	REAR SPRING REAR BRACKET	AA110-53-816			2	2	
7	FUEL TANK MOUNT NO.1 BRACKET	AA110-53-815			1	1	
8	RR FLOOR CROSS MEMBER NO.2	AA110-53-880C			1	1	
9	RER FLOOR CROSS MEMBERNO.3	AA110-53-870C			1	1	
		AA112-53-870C			1	1	
		AA112-53-870C				1	7COH: STD
		AA131-53-870B			1	1	LPG
		AA132-53-870B				1	LPG: STD
10	RR FLOOR CROSS MEMBER NO.4	AA110-53-890B			1	1	
		AA125-53-890				1	MILTI
		AA131-53-890B			1	1	LPG
		AA175-53-890				1	LPG: MULTI

5300J REAR FLOOR FRAME

NO	PART NAME	PART NUMBER	ALL	TRK	VAN	COH	NOTE
11	SIDE REAR FRAME RH	AA100-53-800E		1			
		AA104-53-800		1			L.CARGO
		AA16B-53-800A		1			LPG
		AA13D-53-800B		1			LPG: LCARGO
12	REAR SPRING FRONT BRACKET	AA100-53-870B		2			
13	RR AXLE BUMPER BRACKET	AA100-53-860		2			
14	RR SPRING REAR BRACKET	AA100-53-840		2			
15	SIDE REAR FRAME LH	AA100-54-800D		1			
		AA16B-54-800A		1			LPG
		AA13D-54-800A		1			LPG: LCARGO
		AA100-53-460		2			
16	REAR BODY SUPPORT NO.2	AA100-53-460		2			
17	SIDE FRAME PLATE NO.3 RH	AA100-53-450E		1			
18	SIDE FRAME PLATE NO.3 LH	AA100-54-450C		1			
19	BODY SUPPORT BRACKET NO.4	AA100-53-440B		2			
		AA13D-53-440		2			LPG: LCARGO
20	BODY SUPPORT REINFORCEMENT NO.4	AA100-53-881B		2			
		AA13D-54-881		2			LCARGO
21	FRAME CROSS MEMBER NO.1	AA100-53-910C		1			
22	FRAME CROSS MEMBER NO.2	AA100-53-920C		1			
23	FRAME CROSS MEMBER NO.2	AA100-53-930B		1			
		AA13B-53-930E		1			LPG
24	COOLER COND. MOUNT REINFORCEMENT	AA100-53-891		2			

5300J REAR FLOOR FRAME

NO	PART NAME	PART NUMBER	ALL	TRK	VAN	COH	NOTE
25	FUEL TANK MOUNT BRACKET	AA110-53-893			2	2	
		AA131-53-893A			2	2	LPG
26	PROTECTOR SUB ASM	AA100-53-610B		1			
27	BOLT	D91651-40816		4			
28	REAR SIDE FRAME RH	AA110-53-81XB			1	1	
		AA161-53-81X			1	1	LPG
29	REAR SIDE FRAME LH	AA110-54-81XC			1	1	
		AA161-54-81X			1	1	LPG
30	REAR SIDE FRAME RH	AA100-53-810H		1			
		AA16B-53-810		1			LPG
31	REAR SIDE FRAME LH	AA100-54-810J		1			
		AA16B-54-810		1			LPG

5510A DASHBOARD & RELATED PART

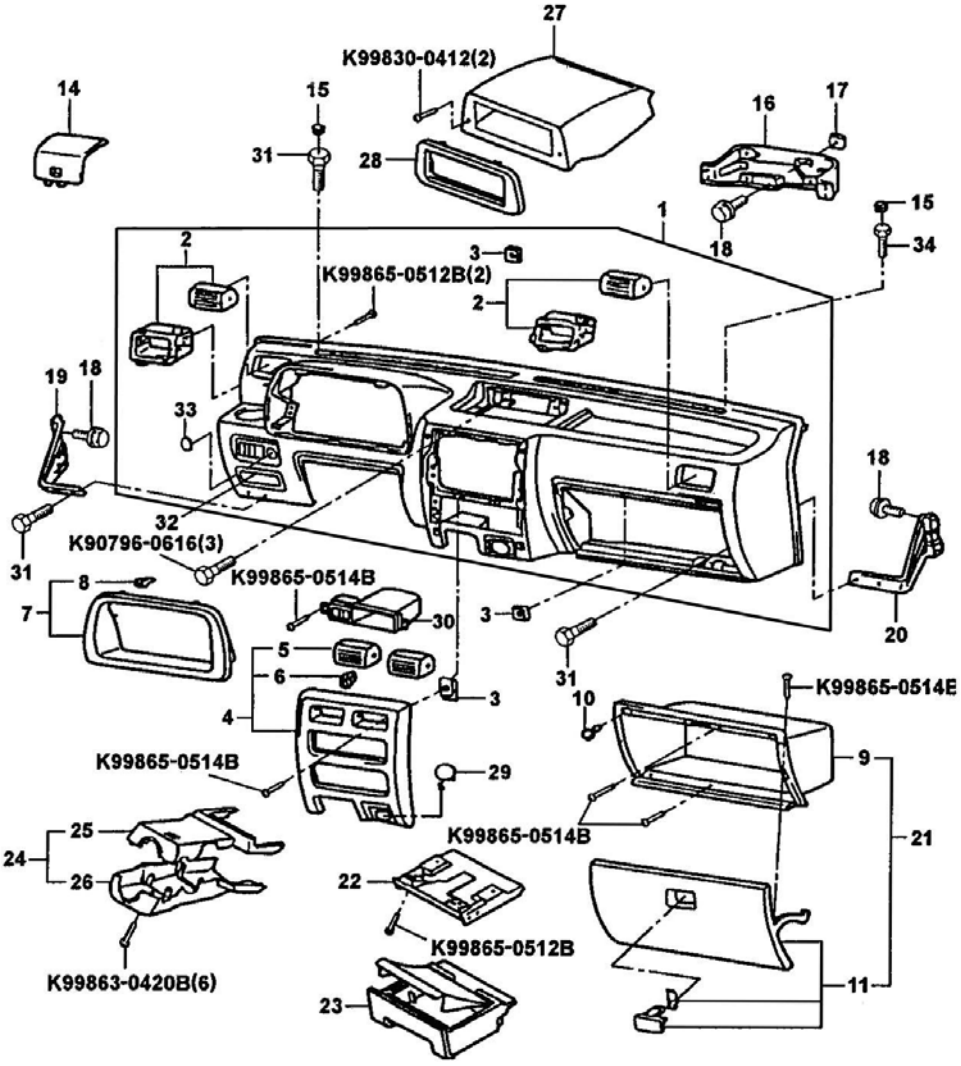

5510A DASHBOARD & RELATED PART

NO	PART NAME	PART NUMBER	ALL	TRK	VAN	COH	NOTE
1	INSTRUMENT DASH	AA100-60-400C	1				
2	VENTILATION GRILLE ASM	AA100-64-830	2				
3	SPRING NUT	K8597-65-122	14				
4	CENTER PANEL ASM	AA100-55-210A	1				
5	LOUVER ASM	AA100-55-210A	1				
6	CLIP	AA100-55-212	5				
7	HOOD METER	AA100-55-420A	1				
8	CLIP	AA100-55-212	4				
9	GLOVE BOX ASM	AA100-64-160	1				
10	RUBBER CUSHION	KB092-64-046	2				
11	GOLVE BOX LID	AA100-64-030A	1				
14	RESERVOIR HOLE DOOR	AA100-55-477	1				
15	HOLE COVER	AA100-55-475	2				
16	CENTER BRACKET	AA100-60-530A	1				
17	SPRING NUT	AA100-50-045	5				
18	BOLT & WASHER	D91661-40616	8				
19	SIDE BRACKET LH	AA100-60-550A	1				
20	SIDE BRACKET RH	AA100-60-540A	1				
21	GLOVE BOX ASM	AA100-64-010	1				
22	OUTER ASH TRAY	AA100-64-620	1				
23	INNER ASH TRAY	AA100-64-630	1				
24	COLUMN COVER ASM	AA100-60-200	1				
25	UPPER COLUMN COVER	AA100-60-221	1				
26	COLUMN LOWER COVER	AA100-60-231	1				
27	CONSOLE UPPER BOX	AA100-60-993A	1				
28	FRONT CONSOLE BOX	AA100-60-990	1				
29	CIGAR LIGHTER HOLE COVER	AA100-55-476		1			STD
30	INSTRUMENT SWITCH PANEL	AA114-55-331	1				
31	BOLT & WASHER	AA110-61-485	6				
32	COIN BOX	AA114-55-578	1				
33	HOLE COVER	AA150-55-478A		1			
34	BOLT	K99784-0616	1				

5510B **CONSOLE**

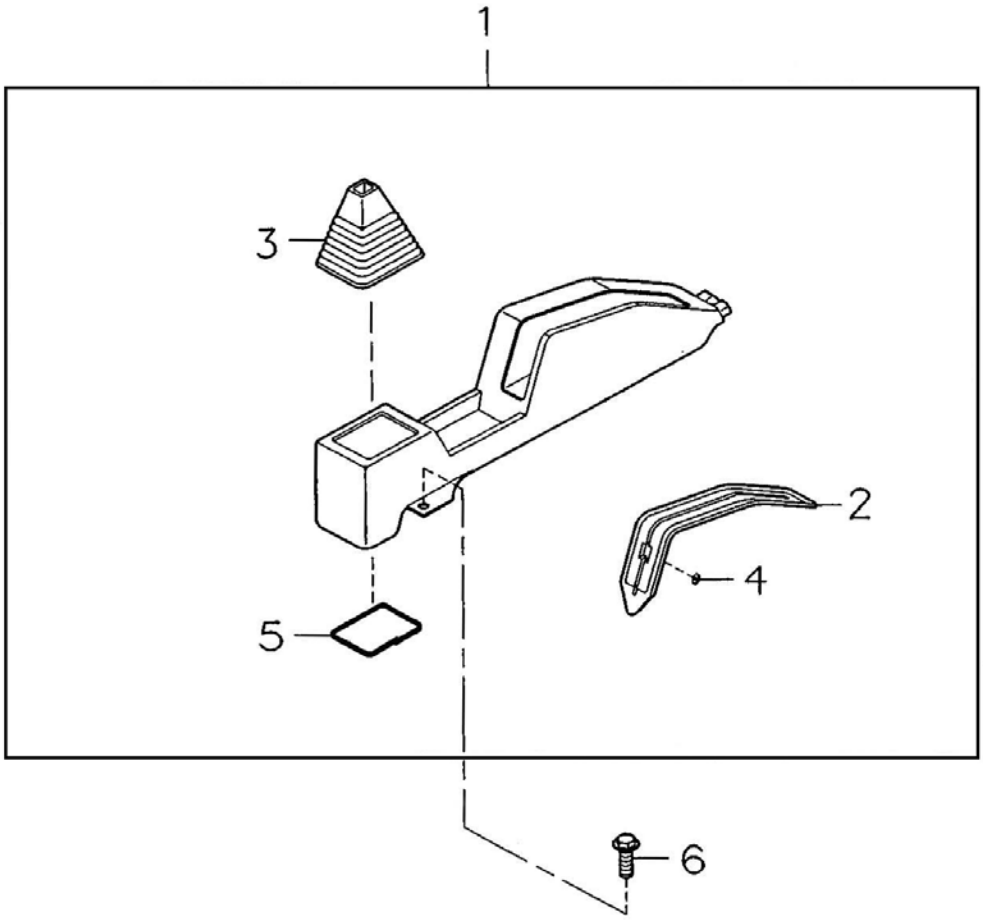

5510B CONSOLE

NO	PART NAME	PART NUMBER	ALL	TRK	VAN	COH	NOTE
1	FRONT CONSOLE	AA114-64-310	1				
2	PARKING BRAKE HOLE COVER	AA100-64-323	1				
3	SHIFTER BOOT	AA114-64-331B	1				
4	SPEED NUT	AA100-64-324	16				
5	BOOT FRAME	AA100-64-322	1				
6	BOLT	K90796-0616	3				

SPEEDOMETER CABLE

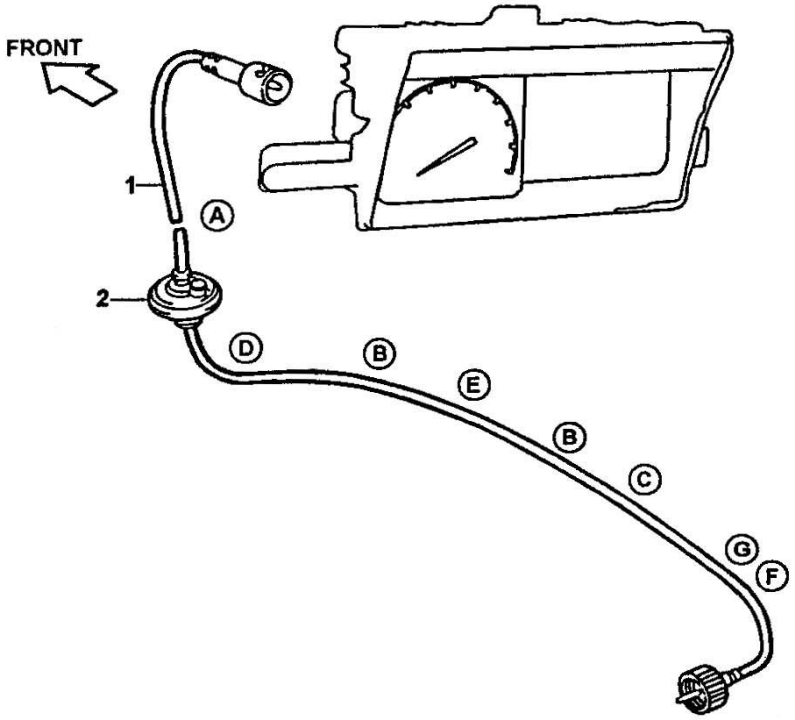

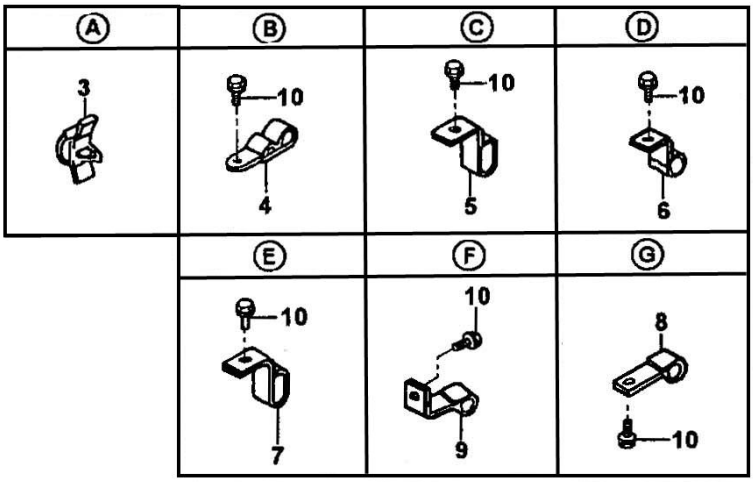

5520A SPEEDOMETER CABLE

NO	PART NAME	PART NUMBER	ALL	TRK	VAN	COH	NOTE
1	SPEEDOMTER CABLE	AA100-60-070A		1			
		AA16A-60-070		1			LPG
		AA110-60-070B			1	1	
		AA161-60-070			1	1	LPG
2	GROMMENT	AA100-60-510A	1				
		AA16A-60-510	1				LPG W/O LCARGO
3	CLAMP	AA100-60-507	1				
4	CLAMP	AA100-60-504	2				
5	CLAMP	AA100-60-506	1				
6	CLAMP	AA100-60-505	1				
7	CLAMP	AA100-60-503	1				
8	CLAMP	AA110-60-501			1	1	
		AA131-60-501			1	1	LPG
9	CLAMP	AA100-60-500		1			
10	BOLT & WASHER	D91651-40616	6				

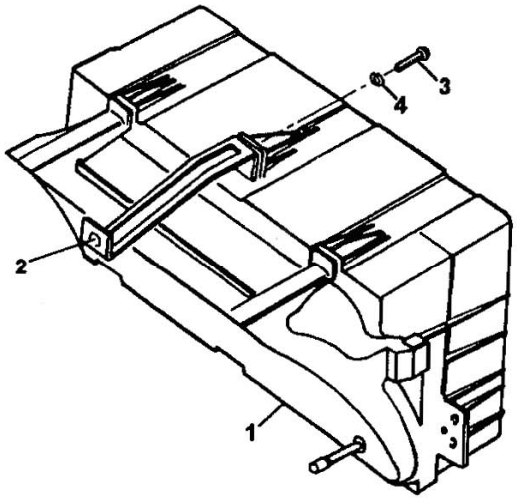
3
4
2
1

5520B METER

NO	PART NAME	PART NUMBER	ALL	TRK	VAN	COH	NOTE
1	METER SET	AA100-55-461K	1				STD: DLX
		AA13A-55-431J	1				LPG: STD, DLX
		AW100-55-431A	1				MPI: STD, DLX
	TACH METER	AA114-55-431H	1				SDX
		AA134-55-431G	1				LPG: SDX
		AW103-55-431A	1				MPI: SDX
2	METER BRACKET	AA100-55-432	1				
3	SCREW	K99830-0510	1				
4	SPRING WASHER	K99971-0500	1				

5610 SPARE TIRE CARRIER

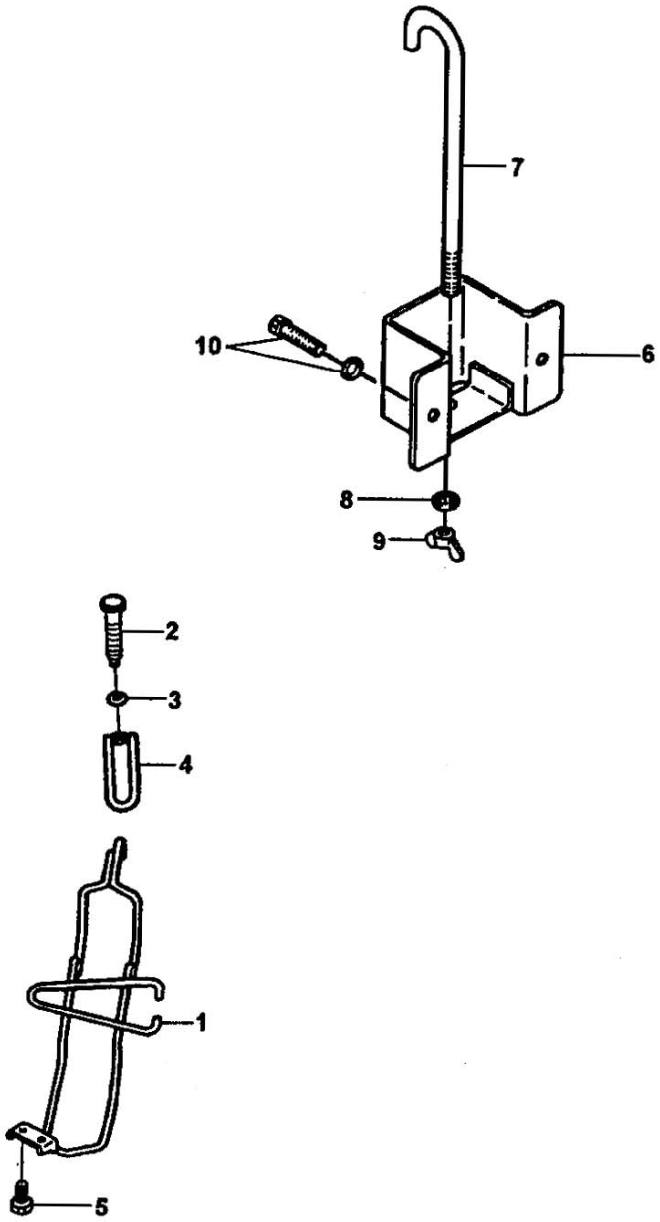

5610 SPARE TIRE CARRIER

NO	PART NAME	PART NUMBER	ALL	TRK	VAN	COH	NOTE
1	SPARE TIRE CARRIER	AA110-56-710B			1	1	
2	BOLT	AA110-56-771			1	1	
3	WASHER	AA110-56-772			1	1	
4	SUPPORT HOOK	AA110-56-720			1	1	
5	BOLT & WASHER	D91651-40816			2	2	
6	SPAARTE TIRE CARRIER	AA13A-56-710A		1			
7	CLAMP	AA13A-56-730B		1			
8	WASHER	K99971-1000		2			
9	WING NUT	K99941-1000		2			
10	BOLT & WASHER	K90801-2814		2			

5620	DAMPING SHEET

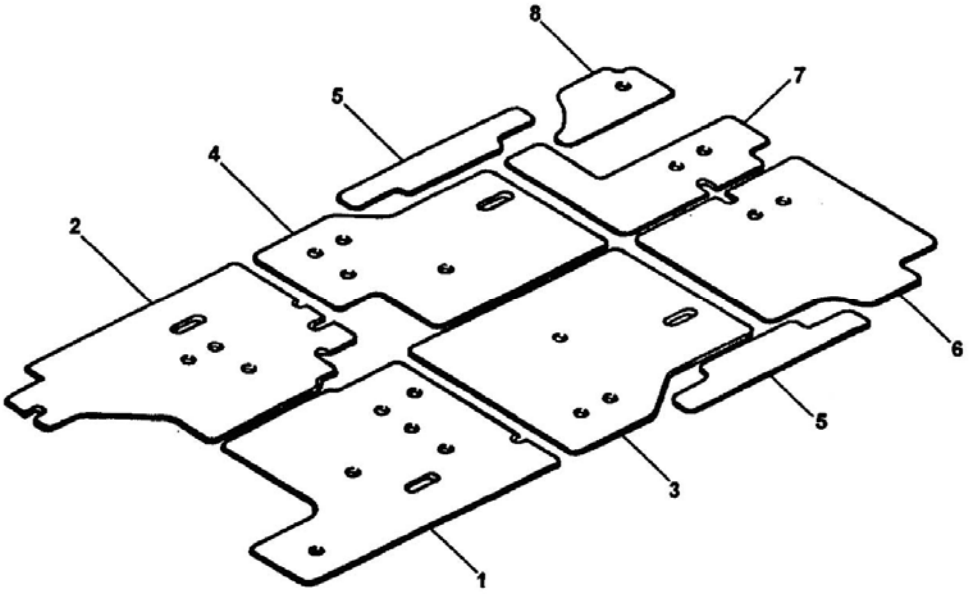

5620 DAMPING SHEET

NO	PART NAME	PART NUMBER	ALL	TRK	VAN	COH	NOTE
1	DAMPING SHEET NO.3	AA110-56-161C			1	1	5VAN
2	DAMPING SHEET NO.4	AA110-56-162D			1	1	5VAN
3	DAMPING SHEET NO.5	AA110-56-163C			1	1	5VAN
4	DAMPING SHEET NO.6	AA110-56-164D			1	1	5VAN
5	DAMPING SHEET NO.7	AA110-56-165A			2	2	5VAN
6	DAMPING SHEET NO.8	AA110-56-166C			1	1	
7	DAMPING SHEET NO.9	AA110-56-167C			1	1	5VAN
8	DAMPING SHEET NO.10	AA110-56-168A			1	1	

5710A FRONT SEAT

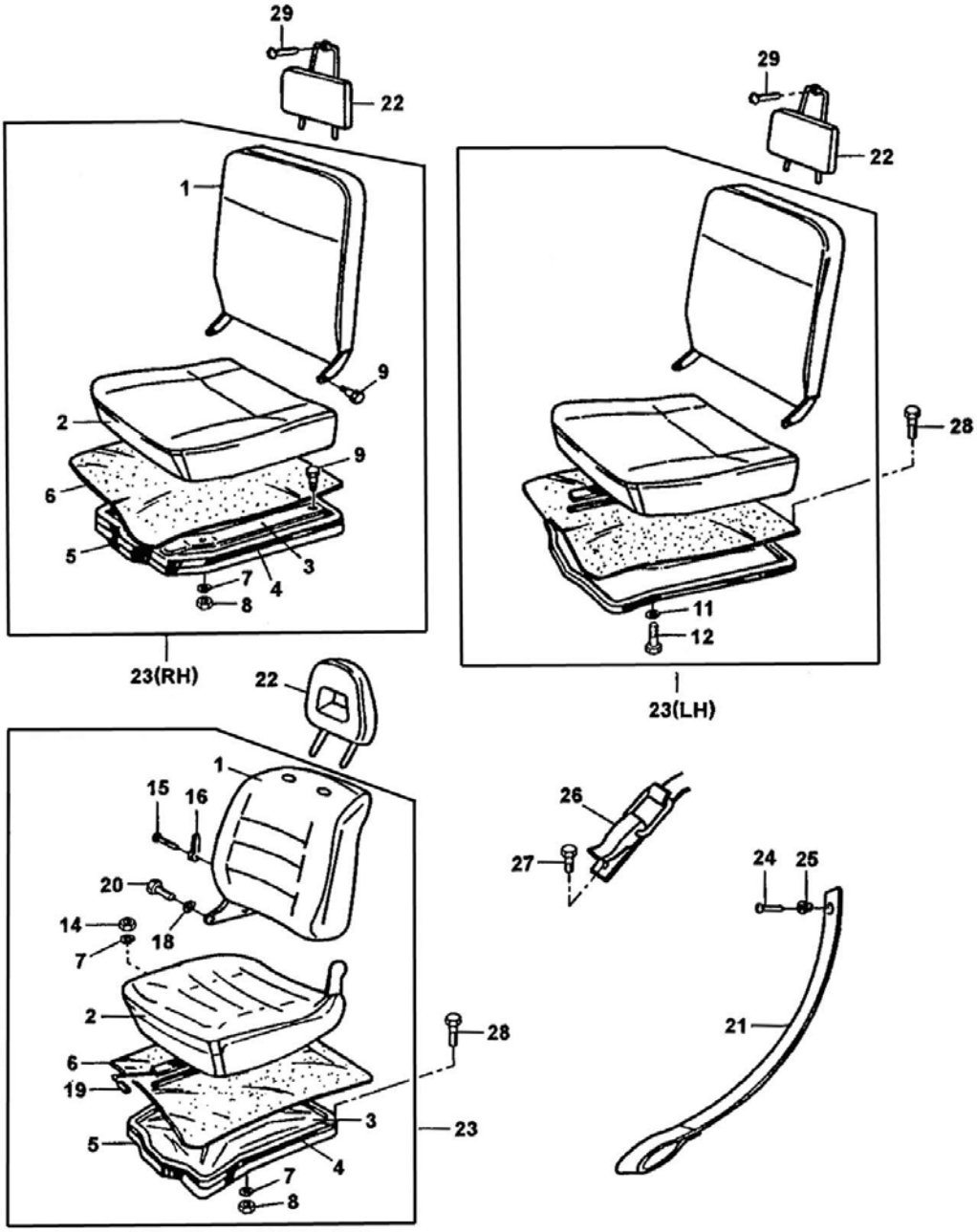

5710A FRONT SEAT

NO	PART NAME	PART NUMBER	ALL	TRK	VAN	COH	NOTE
1	SEAT BACK LH	XOF-88-105		1			STD
	SEAT BACK RH	XOF-88-155		1			STD
	SEAT BACK LH	XOF-88-125-1		1			DLX, SDX
	SEAT BACK RH	XOF-88-175		1			DLX, SDX
	SEAT BACK LH	XOG-88-115			1	1	VAN: DLX, COH: STD
	SEAT BACK RH	XOG-88-165			1	1	VAN: DLX, COH: STD
	SEAT BACK LH	XOG-88-135				1	DLX
	SEAT BACK RH	XOG-88-185			1	1	DLX
	SEAT BACK LH	XOG-88-145			1	1	COH: DLX,SDX VAN: SDX
	SEAT BACK RH	XOG-88-195			1	1	COH: DLX,SDX VAN: SDX
2	SEAT CUSHION LH	XOF-88-100		1			STD
		XOF-88-150-1		1			STD
	SEAT CUSHION LH	XOF-88-120-1		1			DLX,SDX
	SEAT CUSHION RH	XOF-88-170-1		1			DLX,SDX
	SEAT CUSHION LH	XOG-88-110			1	1	VAN:DLX COH: STD
	SEAT CUSHION RH	XOG-88-160			1	1	2VAN: DLX, COH: STD
	SEAT CUSHION LH	XOG-88-140			1	1	VAN: SDX,DLX ,SDX
	SEAT CUSHION RH	XOG-88-190			1	1	VAN: SDX,DLX ,SDX
3	SERVICE PANEL ASM LH	XOF-88-020-6		1			

NO	PART NAME	PART NUMBER	ALL	TRK	VAN	COH	NOTE
3	SERVICE PANEL ASM RH	XPF-88-020-1		1			
	SERVICE PANEL ASM LH	XOG-88-020-8			1	1	
	SERVICE PANEL ASM RH	XOG-88-020-9			1	1	
4	PACKING	AA100-57-131	1				
5	CUSHION	AA100-57-133	2				
6	MAT LH	XOG-88-001-1			1	1	VAN:DLX COH: STD, 5COH: DLX
		XOF-88-001-1		1			
	MAT LH	XOF-88-051		1			
		XOG-88-051-1			1	1	VAN: 5COH, DLX, 7COH, STD
	CARPET LH	XOG-88-001-2			1	1	VAN: SDX,COH:DLX,SDX,W/O 5COH: DLX,
	CARPET RH	XOG-88-051-2B			1	1	VAN: SDX
7	WASHER	99971-0800	1				
8	NUT	99940-0800	2				
9	HINGE PIN	XOF-88-030		2			
11	WASHER	99971-0800		2			
12	BOLT	99784-0816		2			DLX:SDX
14	CAP	XOG-88-0002			1	1	W/O 5VAN
15	SCREW	99832-0410C			1	1	W/O 5VAN
16	KNUCKLE LEVER	XOG-88-0002			1	1	W/O 5VAN
18	WASHER	99971-1000			2	2	
19	SLIDER ASM LH	XOG-88-141			1	1	

NO	PART NAME	PART NUMBER	ALL	TRK	VAN	COH	NOTE
20	BOLT	99920-1026			2	2	W/O 5VAN
21	ENGINE SERVICE COVER BAND	AA100-57-012A		2			
		AA111-57-012			2		2VAN: DLX:SDX
22	HEAD REST ASM	AA100-57-050B		2			
		AA111-57-050E			2	2	2VAN: DLX:SDX
23	FRONT SEAT ASM LH	AA100-57-100H (AA103-57-100S)		1			STD
	FRONT SEAT ASM RH	AA100-57-200H (AA134-57-200G)		1			STD
	FRONT SEAT ASM LH	AA103-57-100H (AA103-57-100S)		1			DLX:SDX
	FRONT SEAT ASM RH	AA103-57-200J (AA134-57-200G)		1			DLX:SDX
	FRONT SEAT ASM LH	AA111-57-100B			1		2VAN: DLX
	FRONT SEAT ASM RH	AA111-57-200F			1		2VAN: DLX
	FRONT SEAT ASM LH	AA112-57-100A			1	1	COH: STD 5VAN: DLX
	FRONT SEAT ASM RH	AA112-57-200C				1	
	FRONT SEAT ASM LH	AA114-57-100C			1	1	COH, 5VAN: SDX
	FRONT SEAT ASM RH	AA114-57-200F			1	1	5VAN: SDX, COH: DLX,SDX
		AA117-57-200E			1		5VAN: DLX
	FRONT SEAT ASM LH	AA119-57-100B			1		2VAN: SDX
		AA173-57-100				1	5COH: DLX
	FRONT SEAT ASM RH	AA119-57-200F			1		2VAN: SCX
		AA173-57-200A				1	DLX:5VA

NO	PART NAME	PART NUMBER	ALL	TRK	VAN	COH	NOTE
24	SCREW	K99865-0516		2			
25	SCREW GROMMENT	K99910-0603		2			
26	FRONT SEAT CATCH ASM	AA100-57-011	2				
27	BOLT	K90797-8616	4				
28	ENGINE COVER BOLT	K90796-0816	4				
29	SCREW	D93270-56012		6			

5710B REAR NO.1 SEAT

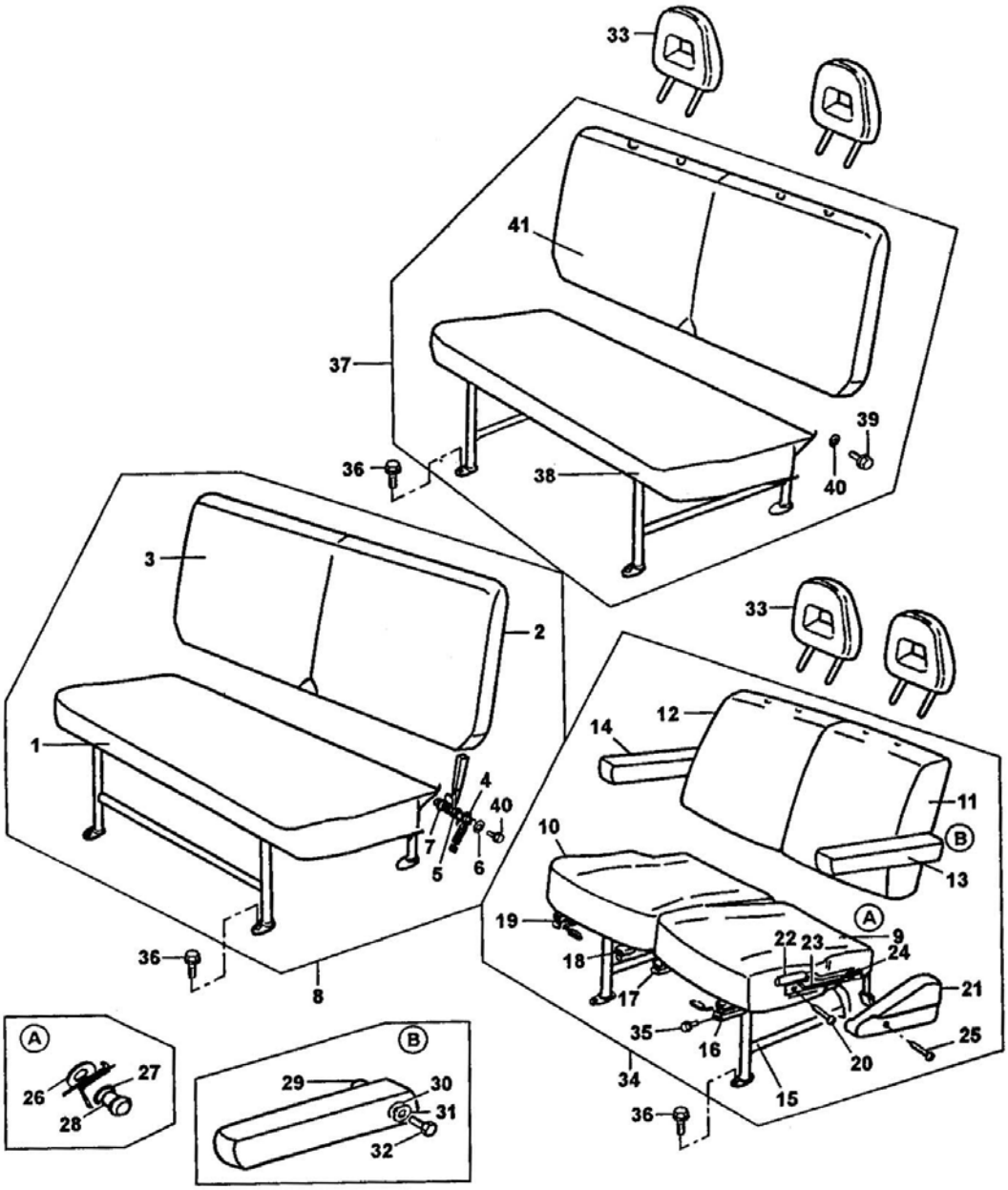

5710B REAR NO.1 SEAT

NO	PART NAME	PART NUMBER	ALL	TRK	VAN	COH	NOTE
1	SEAT CUSHION	XOG-88-1210				1	STD
2	SEAT BACK LH	XOG-88-1250				1	STD
3	SEAT BACK RH	XOG-88-1260				1	STD
4	COIL SPRING LH	XOG-88-1260				1	STD
	COIL SPRING RH	XOG-88-1257				1	STD
	RETURN SPRING	XOG-88-5383			2	2	5VAN: 5COH
5	BYSH	XOG-88-5002			2	2	STD: 5VAN: SDX 5COH
6	WASHER	K721-88-861			2	2	STD: 5VAN: 7COH: 4COH
7	HINGE BUSHING	B002-88-270				2	STD
8	REAR SEAT NO.1 ASM	AA132-57-300D				7	7COH: STD
9	SEAT CUSHION LH	XOG-88-3210				1	7COH: DLX:SDX
10	SEAT CUSHION RH	XOG-88-3230				1	7COH: DLX:SDX
11	SEAT BACK ASM LH	XOG-88-3230				1	7COH: DLX:SDX
12	SEAT BACK ASM RH	XOG-88-3280				1	7COH: DLX:SDX
13	ARM REST ASM LH	XOG-88-4310				1	7COH: DLX:SDX
14	ARM REST ASM RH	XOG-88-4350				1	7COH: DLX:SDX
15	LEG ASM	XOG-88-4110				1	7COH: DLX:SDX
16	ADJUSTER NO.1	XOG-88-3203				1	7COH: DLX:SDX
17	ADJUSTER NO.2	XOG-88-3204				1	7COH: DLX:SDX
18	ADJUSTER NO.3	XOG-88-3205				1	7COH: DLX:SDX
19	ADJUSTER NO.4	XOG-88-3206				1	7COH: DLX:SDX
20	SCREW	0259-57-109				4	7COH: DLX:SDX

5710B REAR NO.1 SEAT

NO	PART NAME	PART NUMBER	ALL	TRK	VAN	COH	NOTE
21	KNUCKLE COVER LH	XOG-88-4401				1	7COH: DLX:SDX
	KNUCKLE COVER RH	XOG-88-4402				1	7COH: DLX:SDX
22	KNOB LH	B001-88-091				1	7COH: DLX:SDX
		XOG-88-5004				1	STD
	KNOB RH	B001-88-081				1	7COH: DLX:SDX
		XOG-88-5005				1	STD
23	WALK IN SHAFT	XOG-88-3299				2	7COH: DLX:SDX
24	NUT	K1243-88-323				2	7COH: DLX:SDX
25	SCREW	99865-0510B				2	7COH: DLX:SDX 26
26	WASHER	D001-88-012A				2	7COH: DLX:SDX
27	LINK BUSHING	S083-57-157				2	7COH: DLX:SDX
28	LINK BOLT	SA86-57-153				2	7COH: DLX:SDX
29	ARM REST BUSHING	XOG-83-4316				2	7COH: DLX:SDX
30	WASHER	99203-5000				2	7COH: DLX:SDX
31	WASHER	99203-5000				2	7COH: DLX:SDX
32	BOLT	XOG-88-4318				2	7COH: DLX:SDX
33	HEAD REST ASM	AA111-57-050E			2	2	5VAN: W/O COH: STD
34	REAR SEAT NO.1 ASM	AA134-57-300E				1	7COH: DLX:SDX
		AA144-57-300D			1	1	5VAN: SDX: 5COH
		AA175-57-300B				1	MULTI

5710B REAR NO.1 SEAT

NO	PART NAME	PART NUMBER	ALL	TRK	VAN	COH	NOTE
35	BOLT	K90796-0820B				8	7COH: DLX:SDX
36	BOLT	K90804-6825B			8	8	5VAN
37	REAR SEAT NO.1 ASM	AA138-57-300D			1		5VAN: DLX
28	SEAT CUSHION	XOG-88-5300			1		5VAN: DLX
		XOG-88-5400			1	1	5VAN: SDX: 5COH
39	HINGE BOLT	XOG-88-5000			2	2	5VAN: 5COH: 7COH: STD
40	WASHER	99784-1000			2		5VAN
41	SEAT BACK ASM	XOG-88-5350			1		5VAN: DLX
		XOG-88-5450			1	1	5VAN: DLX: 5COH

5710C REAR NO.2 SEAT

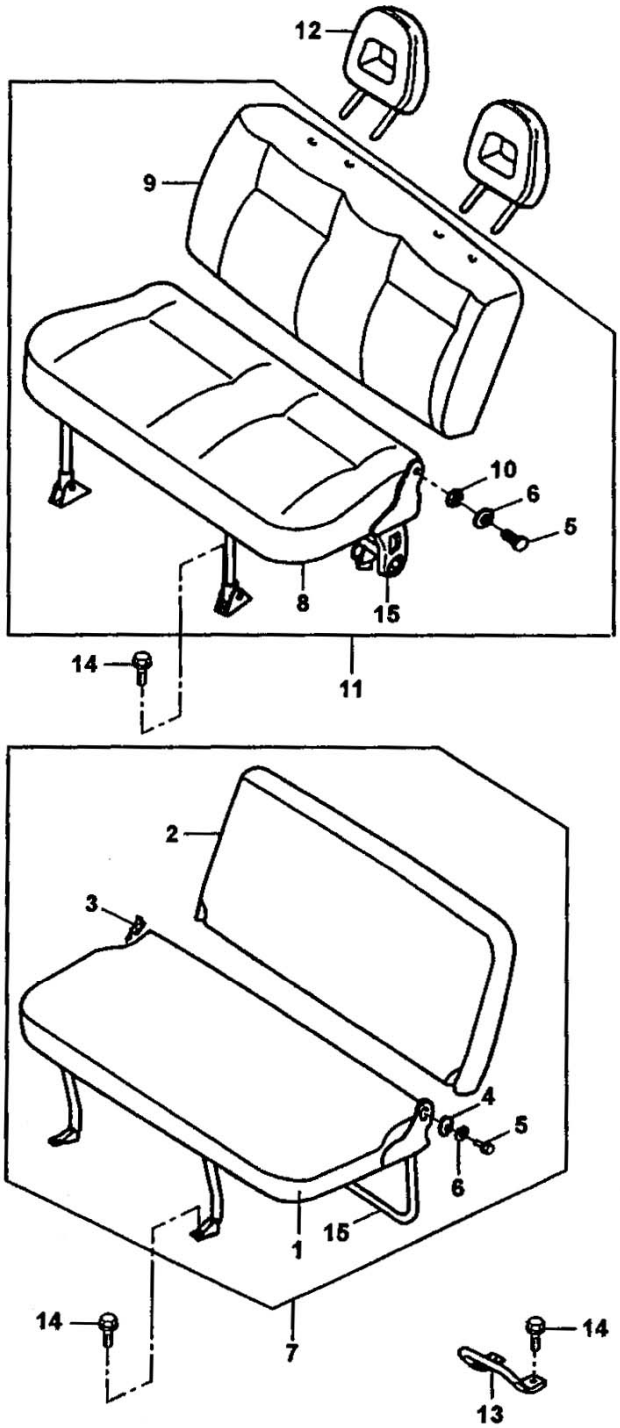

5710C REAR NO.2 SEAT

NO	PART NAME	PART NUMBER	ALL	TRK	VAN	COH	NOTE
1	SEAT CUSHION	XOG-88-1310				1	STD
2	SEAT BACK	XOG-88-1350				1	STD
3	COIL SPRING LH	XOG-88-1260				1	STD
4	BUSHING	XOG-88-5002				2	STD
5	HINGE BOLT	XOG-88-5000				2	
6	WASHER	K721-88-861				2	
7	REAR SEAT NO.2 ASM	AA112-57-500H				1	STD
8	SEAT CUSHION	XOG-88-3310				1	DLX:SDX
9	SEAT BACK ASM	XOG-88-3380				1	DLX:SDX
10	BUHING	K721-88-860				2	DLX:SDX
11	REAR SEAT NO.2	AA114-57-500J				1	DLX:SDX
12	HEAR REST	AA111-57-050E				2	DLX:SDX
13	REAR SEAT STRIKER NO.2	AA112-57-031				2	
14	BOLT	K90804-6825B				10	
15	LEG ASM	XOG-88-1361				1	STD
		XOG-88-3351				1	DLX:SDX

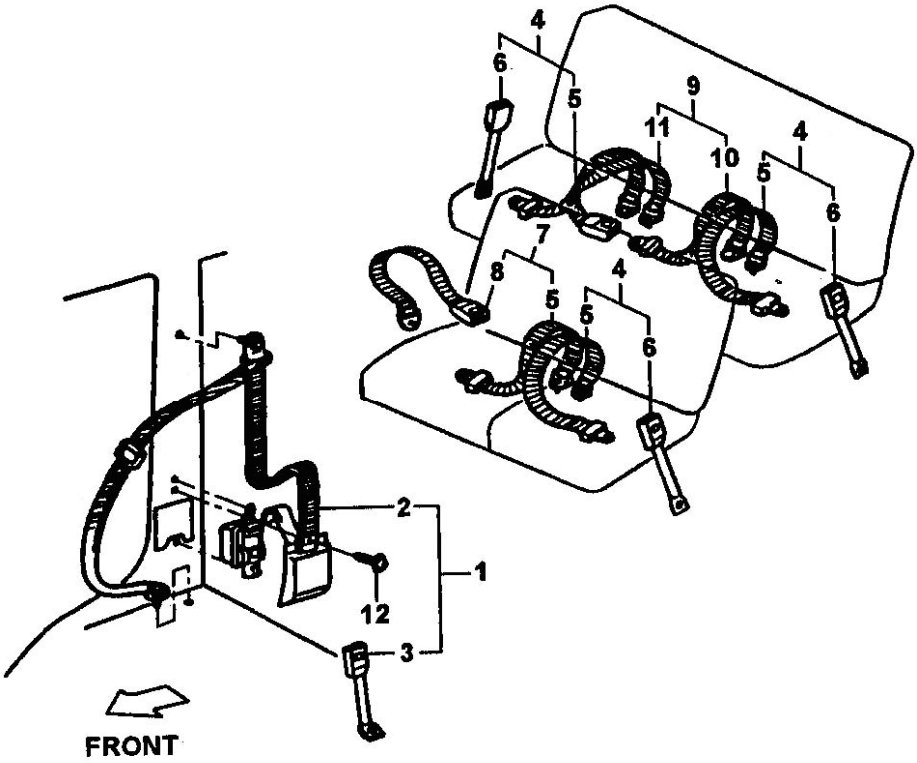
4
6
5
9
11
10
4
5
6
7
8
5
4
5
6
2
1
12
3
FRONT

5720 SEAT BELTS

NO	PART NAME	PART NUMBER	ALL	TRK	VAN	COH	NOTE
1	FRONT SEAT BELT LH	AA100-57-170A	1				AJIN
	FRONT SEAT BELT RH	AA100-57-270A	1				AJIN
2	FRONT BELT "B" LH	AA100-57-172B AA100-57-172D09	1				AJIN
	FRONT BELT "B" RH	AA100-57-272B AA100-57-272D09	1				AJIN
3	BELT "A" LH	AA100-57-171 AA100-57-171B09	1				AJIN
	BELT "A" RH	AA100-57-271 AA100-57-271B09	1				AJIN
4	BELT ASM LH	AA112-57-370			2	2	W/O 2VAN
		AA112-57-670				2	AJIN
		AA125-57-370				1	MULTI
5	BELT "B"	AA112-57-372A			1	1	AJIN
6	BLET "A"	AA112-57-371			1	1	AJIN
7	BELT ASM RH	AA112-57-470A				1	AJIN
8	BELT "A"	AA112-57-471				1	AJIN
9	CENTER BELT ASM	AA112-57-570			1	1	AJIN
10	BELT "B"	AA112-57-572A			1	1	AJIN: W/O 2VAN
11	BELT "A"	AA112-57-571			1	1	AJIN: W/O 2VAN
12	TAPPING SCREW	K99865-0516	2				

5730 INTERIOR (TRAVELING CASH BOX)

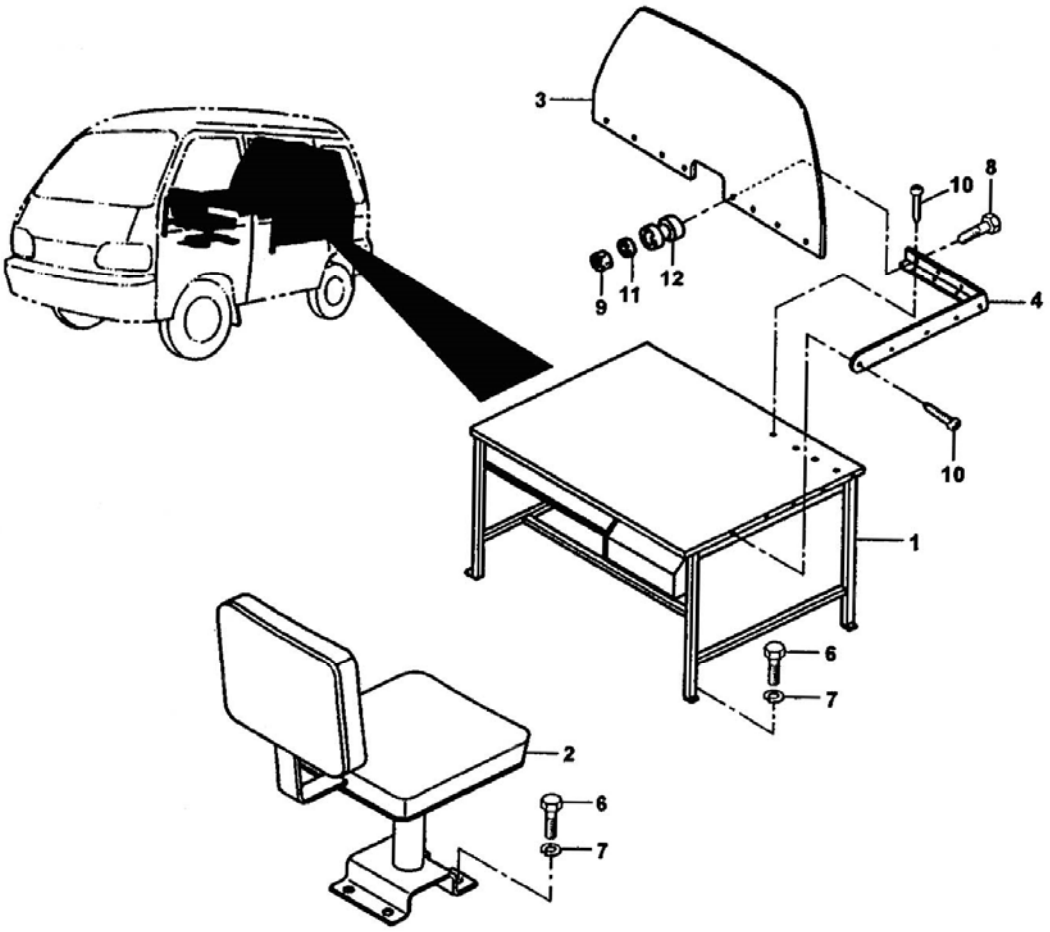

5730 INTERIOR (TRAVELING CASH BOX)

NO	PART NAME	PART NUMBER	ALL	TRK	VAN	COH	NOTE
1	TABLE	AA114-57-01X P12				1	
2	SEAT	AA114-57-040 912				2	
3	ACRYL GUARD	AA114-57-030 P12				1	
4	GUARD LH	AA144-57-040 P12				1	
5	BRACKET	AA144-57-070 P12				1	
6	BOLT	K99750-0835				12	
7	WASHER	K99971-0800				12	
8	BOLT	K9489-0512-0A				12	
9	NUT	OK625-70-361				12	
10	SCREW	K99767-0416				16	
11	PACKING	AA114-57-1X1				12	
12	WASHER	OK625-72-522A				12	

5800 FRONT DOOR (BODY & TRIM)

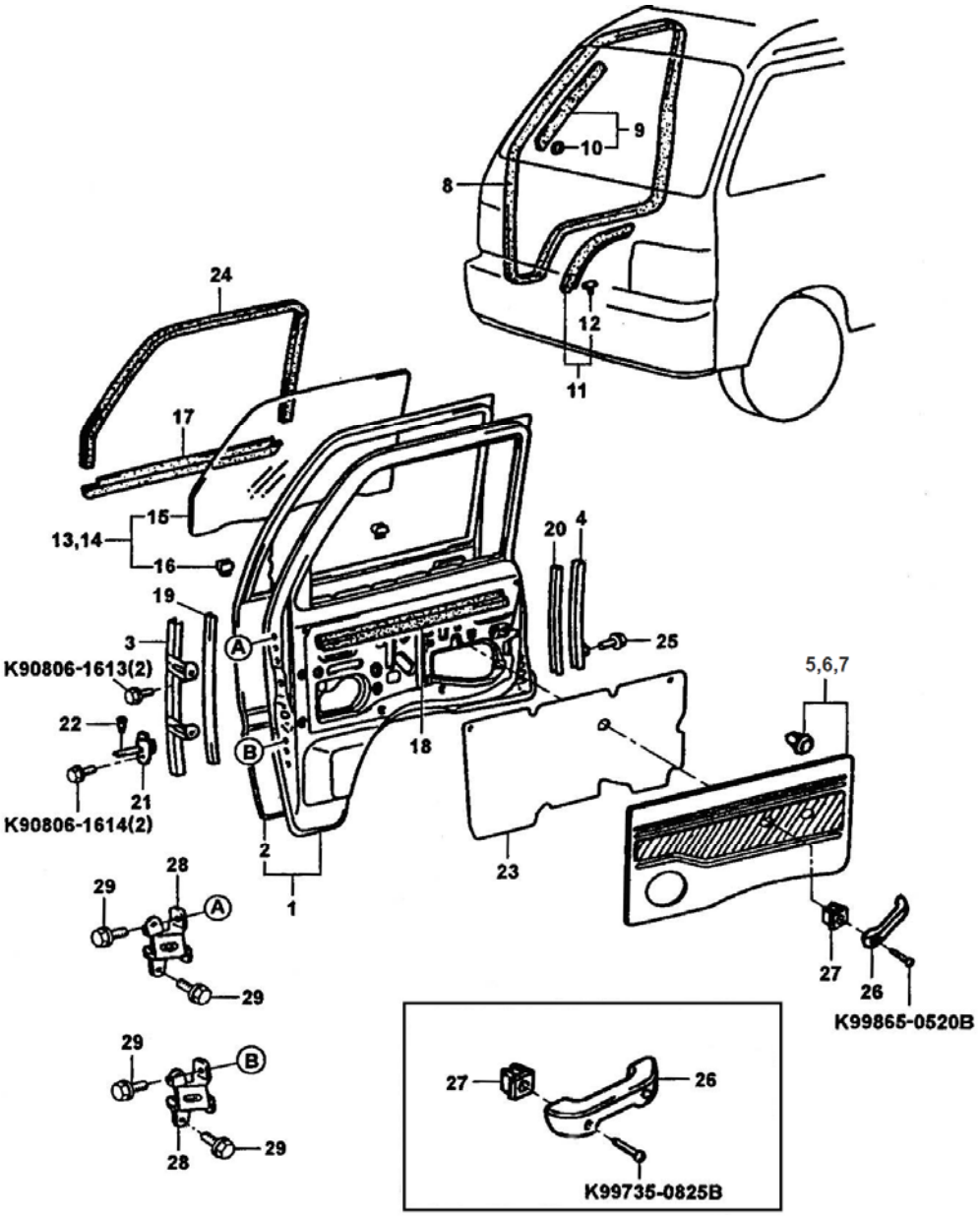

5800 FRONT DOOR (BODY & TRIM)

NO	PART NAME	PART NUMBER	ALL	TRK	VAN	COH	NOTE
1	FRONT DOOR PANEL RH	AA100-58-020	1				
	FRONT DOOR PANEL LH	AA100-59-020	1				
2	FRONT DOOR O/S PANEL LH	AA100-59-030	1				
	FRONT DOOR O/S PANEL RH	AA100-58-030	1				
3	FRONT DOOR FRONT LOWER PANEL	AA100-58-600A	2				
4	FRONT DOOR REAR LOWER FRAME RH	AA100-58-610	1				
	FRONT DOOR REAR LOWER FRAME LH	AA100-59-610	1				
5	FRONT DOOR TRIM BOARD RH	AA111-68-420			1		DLX
		AAW01-68-420A		1		1	EXP:DLX
		AA101-68-420A	1			1	EXP:TRK ,COH: STD VAN:DLX
		AA114-68-420D			1	1	SDX
			1				EXP:SDX
		AAW23-68-420A		1		1	OPT: EXP:DLX
		AA115-68-420B		1		1	DLX:LPG 7COH: SDX
		AA116-68-420A		1		1	5COH: DLX,LPG ,7COH: SDX OPT
		AA119-68-420C			1	1	OPT: CLOTH
				1			SDX
			1				EXP:OPT
6	FRONT DOOR REAR LOWER FRAME RH	AA11-68-450			1		DLX
		AAW01-68-450A		1		1	EXP:DLX

NO	PART NAME	PART NUMBER	ALL	TRK	VAN	COH	NOTE
		AA101-68-450A	1				EXP:TRK ,COH: STD VAN:DLX
		AA114-68-450D			1	1	SDX
			1				EXP
		AA115-68-450B		1		1	5COH: DLX,LPG ,7COH: SDX OPT
		AA119-68-450C			1	1	OPT: LOT
				1			SDX
			1				EXP:OPT
7	FASTENER	AA100-68-401	20				
8	FRONT DOOR WEATHERSTRIP	AA100-68-900 AA100-68-911A	2				
9	DOOR UPPER WEATHERSTRIP RH	AA100-58-760	1				
	DOOR UPPER WEATHERSTRIP LH	AA100-59-760	1				
10	CLIP	KKY02-58-762	16				
11	DOOR LOWER WEATHERSTRIP	AA100-59-765	2				
12	CLIP	AA100-58-763	22				
13	FRONT DOOR GLASS RH	AA100-58-710	1				
		AA114-58-710	1				COLOR: OPT: SDX
14	FRONT DOOR GLASS RH	AA100-59-710	1				
		AA114-59-710	1				COLOR: OPT: SDX
15	FRONT WINDOW GLASS RH	AA100-58-711	1				
		AA114-59-710	1				COLOR: OPT: SDX
	FRONT WINDOW GLASS LH	AA100-59-711	1				

NO	PART NAME	PART NUMBER	ALL	TRK	VAN	COH	NOTE
		AA114-59-711	1				COLOR: OPT: SDX
16	DOOR WINDOW GLASS HOLDER	AA100-58-712	4				
17	GLASS OUTER WEATHERSTRIP RH	AA100-58-812	1				
	GLASS OUTER WEATHERSTRIP LH	AA100-58-811	1				
18	DOOR INSIDE WEATHERSTRIP	AA100-58-821	2				
19	FRONT DOOR GLASS RUN	AA100-58-721A	1				
20	FRONT DOOR GLASS RUN	AA100-59-721	2				
21	DOOR CHECK ASM	AA100-58-270A	2				
22	DOOR CHECK PIN	OK900-58-265A	2				
23	DOOR SCREEN RH	AA100-58-862	1				
	DOOR SCREEN LH	AA100-58-861	1				
24	FRONT DOOR GLASS RUN RH	AA100-58-722	1				
	FRONT DOOR GLASS RUN LH	AA100-59-722	1				
25	BOLT & WASHER	AA100-56-893	2				
26	DOOR PULL HANDLE	AA100-69-390A		2		2	STD
			2				EXP:STD DLX
	ARM REST	M8531-69-371	2				DLX,SDX
27	SCREW GROMMENT	AA100-69-361		4		4	STD
		H001-58-210	4				
28	FRONT DOOR HINGE ASM	AA100-58-210	4				
29	BOLT & WASHER	AA100-56-895	16				

5830 FRONT DOOR MECHCANSIM

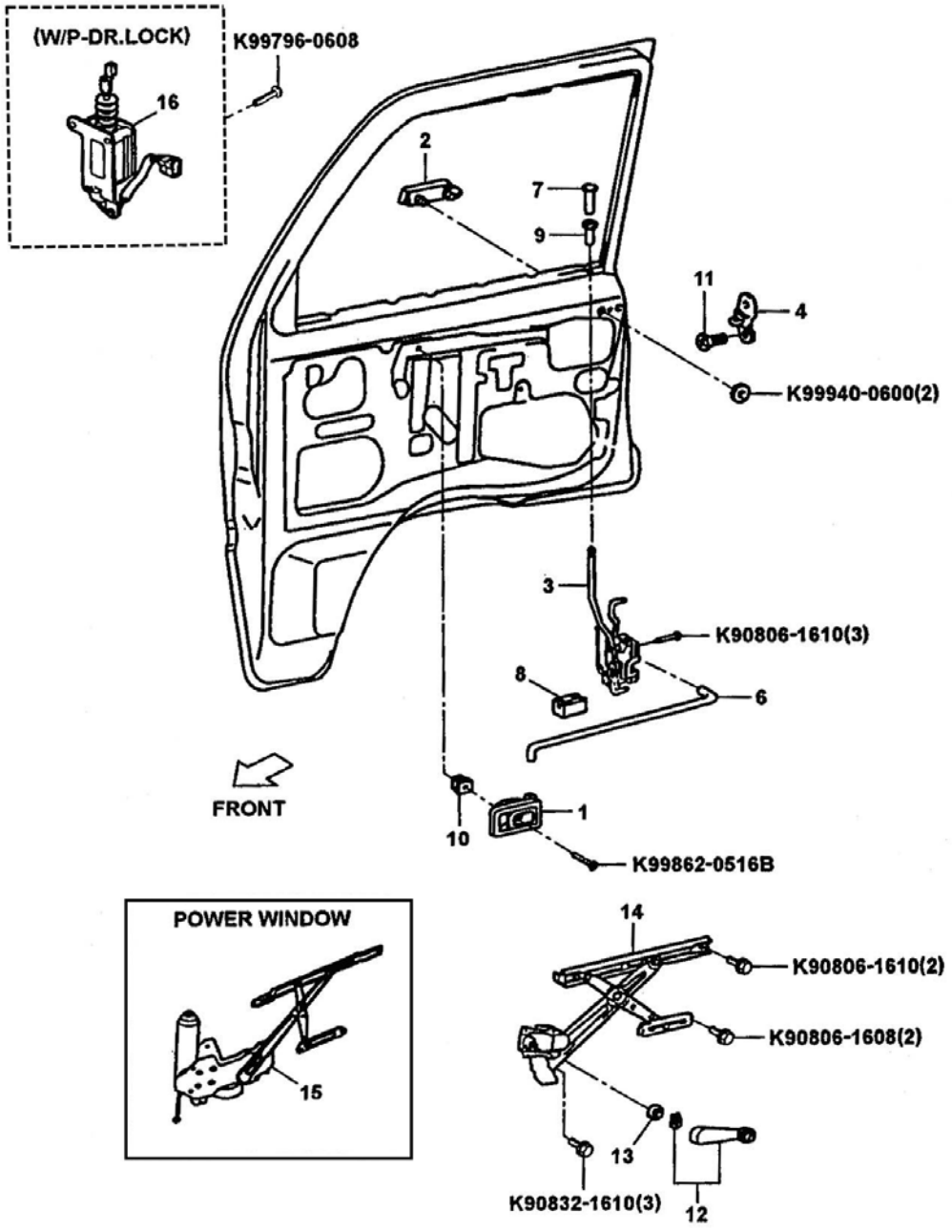

5830 FRONT DOOR MECHCANSIM

NO	PART NAME	PART NUMBER	ALL	TRK	VAN	COH	NOTE
1	DOOR HANDLE INSIDE RH	AA100-58-320	1				
	DOOR HANDLE INSIDE LH	AA100-59-320	1				
2	DOOR HANDLE FRONT O/S RH	AA100-58-410A	1				
	DOOR HANDLE FRONT O/S LH	AA100-59-410A	1				
3	DOOR LOCK ASM FRONT RH	AA100-58-310C	1				
		AA101-058-310	1				OPT:DLX SDX
	DOOR LOCK ASM FRONT LH	AA100-59-310C	1				
		AA101-59-310	1				OPT:DLX SDX
4	DOOR LOCK STRICKER PLATE	AA100-58-360A	2				
6	DOOR OPEN LINK FRONT RH	AA100-58-364	1				
	DOOR OPEN LINK FRONT LH	AA100-59-364	1				
7	DOOR LOCKING BUTTON	AA100-58-316A	2				
8	DOOR LOCK LINK SILENCER	AA100-58-371A	2				
9	GROMMET	AA100-56-869	2				
10	SCREW GROMMET	AA100-59-361	2				
11	CROSS SCREW	AA100-59-361	2				
12	DOOR WINDOW REGULATOR HANDLE	AA100-58-580A	2				
13	ESCUTCHEON	KY01-58-582A	2				
14	DOOR WINDOW REGULATOR FRONT RH	AA100-58-560B	1				W/O SDX
	DOOR WINDOW REGULATOR FRONT LH	AA100-59-560B	1				W/O SDX
15	DOOR POWER WINDOW REGULATOR FRONT RH	AA101-58-560A	1				SDX: 5VAN DLX:OPT

5830 FRONT DOOR MECHCANSIM

NO	PART NAME	PART NUMBER	ALL	TRK	VAN	COH	NOTE
	DOOR POWER WINDOW REGULATOR FRONT LH	AA101-59-560A	1				SDX: 5VAN DLX:OPT
16	LOCK CONTROLLER						

6110A HEATER CONTROL & AIR DUCT

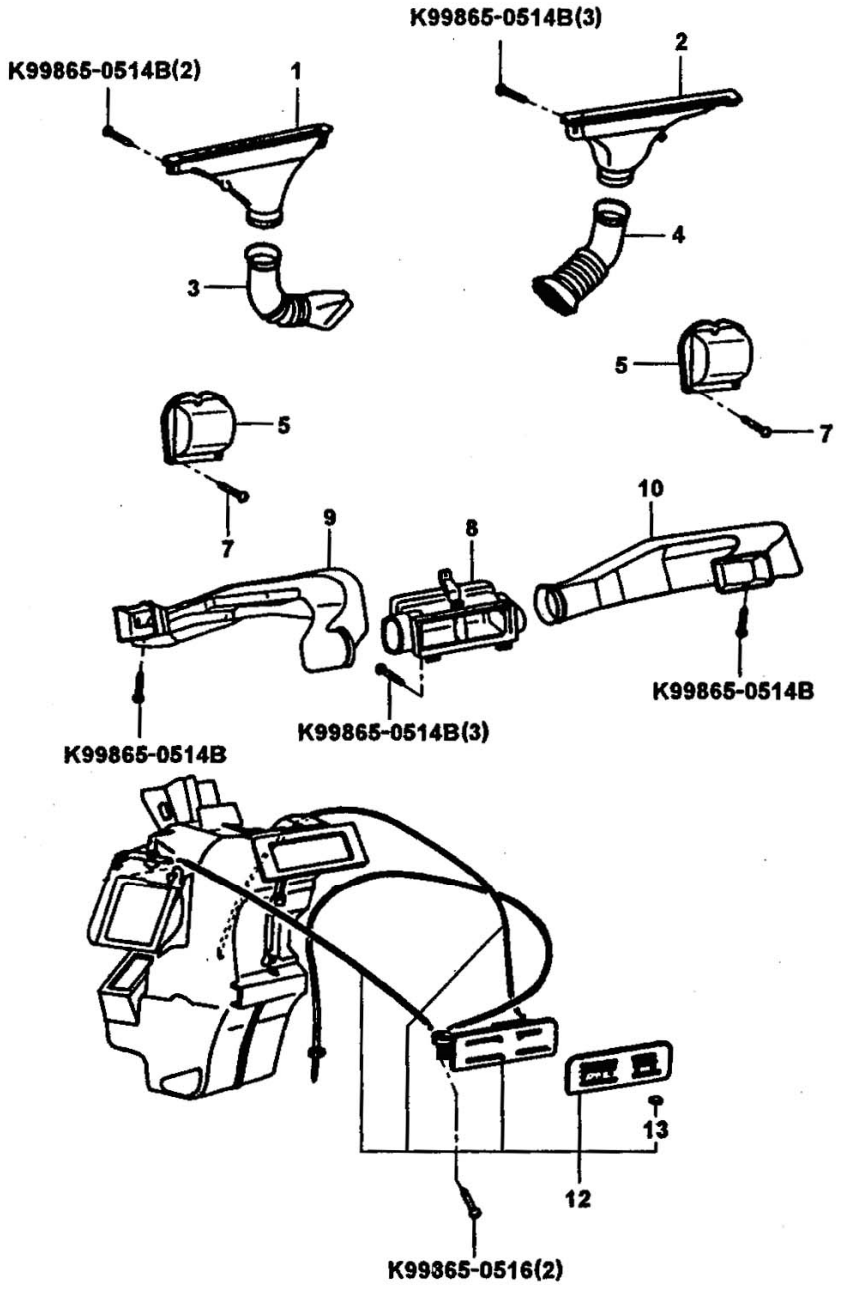

6110A HEATER CONTROL & AIR DUCT

NO	PART NAME	PART NUMBER	ALL	TRK	VAN	COH	NOTE
1	DEFROSTER NOZZLE LH	AA100-60-141	1				
2	DEFROSTER NOZZLE RH	AA100-60-121	1				
3	DEFROSTER HOSE LH	AA100-60-252A	1				
4	DEFROSTER HOSE RH	AA100-60-251A	1				
5	DUCT	AA100-64-761A	2				
8	CENTER DUCT	AA100-64-951A	1				
9	DUCT LH	AA100-64-846	1				
10	DUCT RH	AA100-64-847	1				
12	HEATER CONTROL	AA111-61-190B			1	1	POONG SUNG
		AA110-61-190B			1	1	DOO WON
		AA100-61-190C		1			DONG HWAN
13	HEATER CONTROL KNOB	AA110-61-191			1	1	POONG SUNG
		AA111-61-191			1	1	DOO WON
		AA100-61-191		1			DONG HWAN
14	INTAKE NATURAL DUCT	AA110-64-761	2				

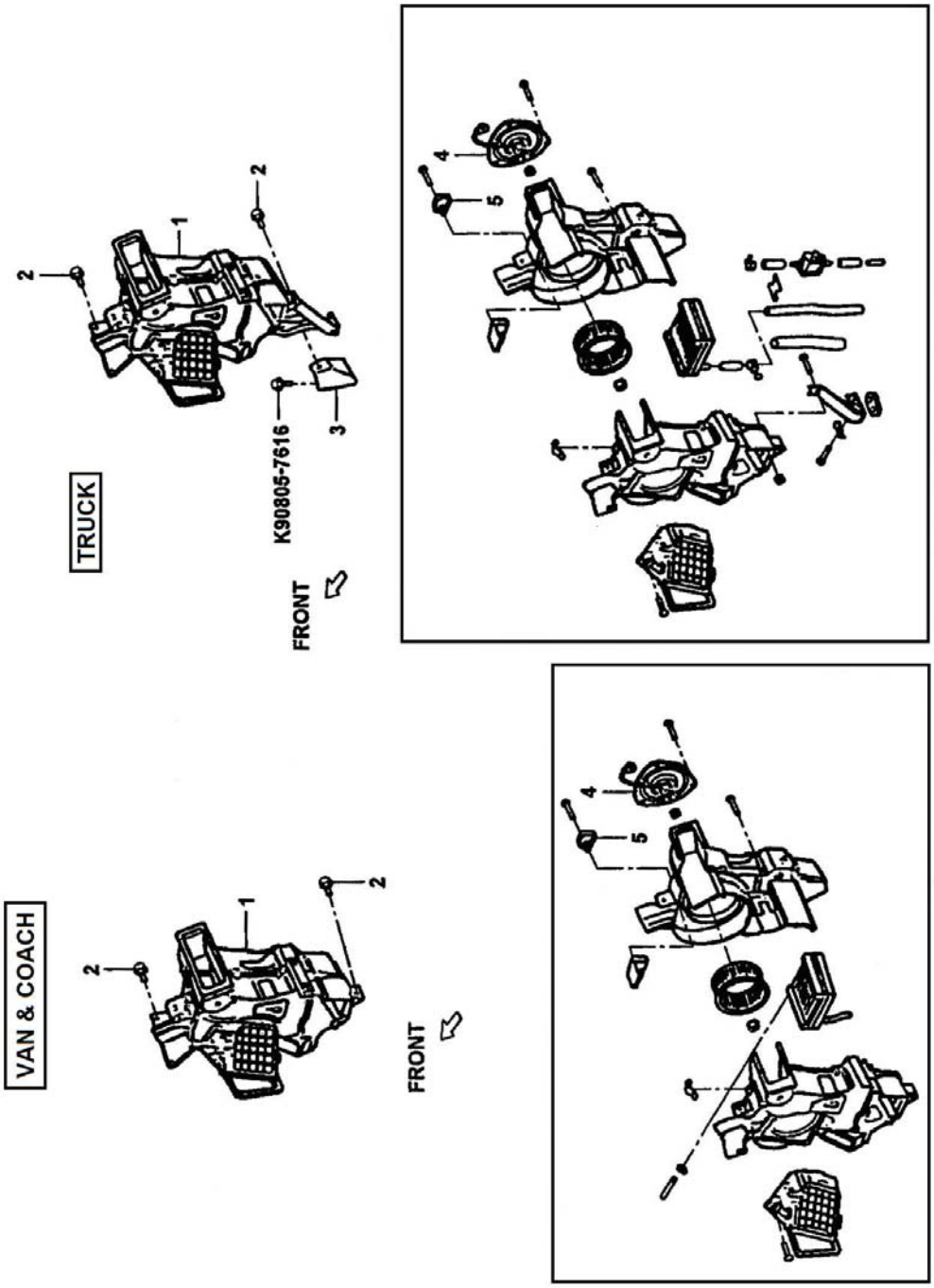
TRUCK
VAN & COACH
FRONT
FRONT
K90805-7616
1
2
2
2
3
4
5
1
2
2
4
5

6110B FRONT HEATER

NO	PART NAME	PART NUMBER	ALL	TRK	VAN	COH	NOTE
1	FRONT HEATER UNIT	AA100-61-130B			1	1	POONG SUNG
		AA110-61-130A			1	1	DOO WON
		AA100-61-130B		1			
2	BOLT & WASHER	AA100-56-889	3				
3	HEATER UNIT BRACKET	AA100-61-135A		1			
4	HEATER MOTOR (FRONT)	AA100-61-131 (AA100-61-B10)		1			DONG HWAN
		AA111-61-131			1	1	POONG SUNG
		AA110-61-131		1			DOO WON
5	HEATER RESISTOR	AA100-61-132		1			DONG HWAN
		AA110-61-132			1	1	POONG SUNG
		AA111-61-132			1	1	DOO WON

6110C HEATER PIPING (TRUCK)

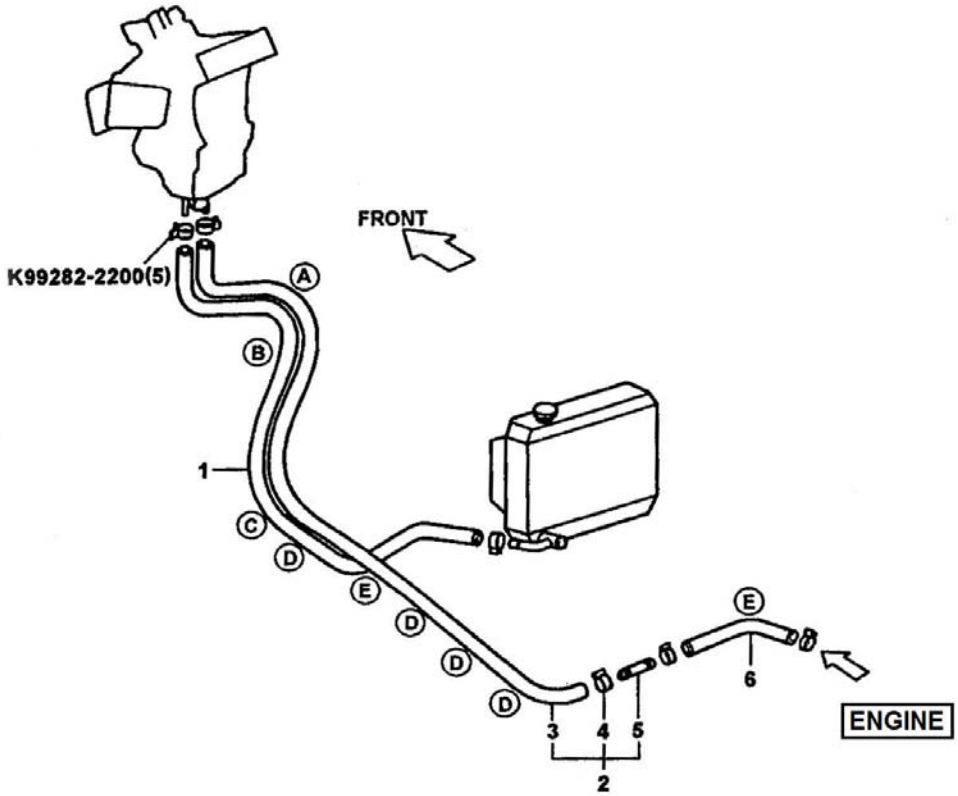

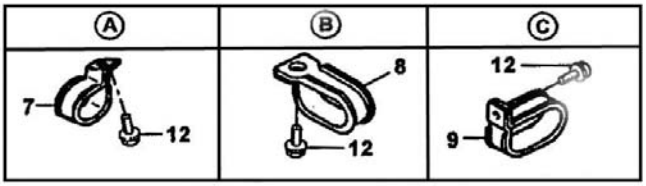

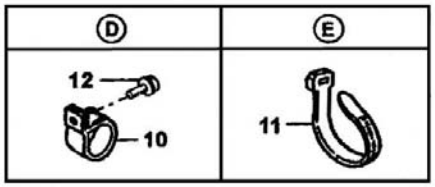

6110C HEATER PIPING (TRUCK)

NO	PART NAME	PART NUMBER	ALL	TRK	VAN	COH	NOTE
1	HEATER OUTLET NO.1 HOSE	AA100-61-314B		1			
		AA13A-61-314		1			LPG
2	HEATER INLET NO.2 HOSE	AA100-61-312B		1			
		AA16A-61-312A					LPG
3	HOSE	AA100-61-313A		1			
		AA13A-61-313		1			
4	HOSE CLIP	K99282-2200		1			
5	WATER HOSE JOINT	AA100-61-138B		1			
		AA13A-61-138		1			LPG
6	HEATER INLET NO.1 HOSE	AA100-61-311B		1			
		AA16A-61-311B		1			LPG
7	CLAMP	AA100-61-212		1			
8	CLAMP	AA100-61-213		1			
9	CLAMP	AA100-61-214		1			
10	CLAMP	AA100-61-215		4			
11	BAND CLAMP	K99709-3200		2			
12	BOLT	K99796-0612		7			

6110D HEATER PIPING (VAN-COACH)

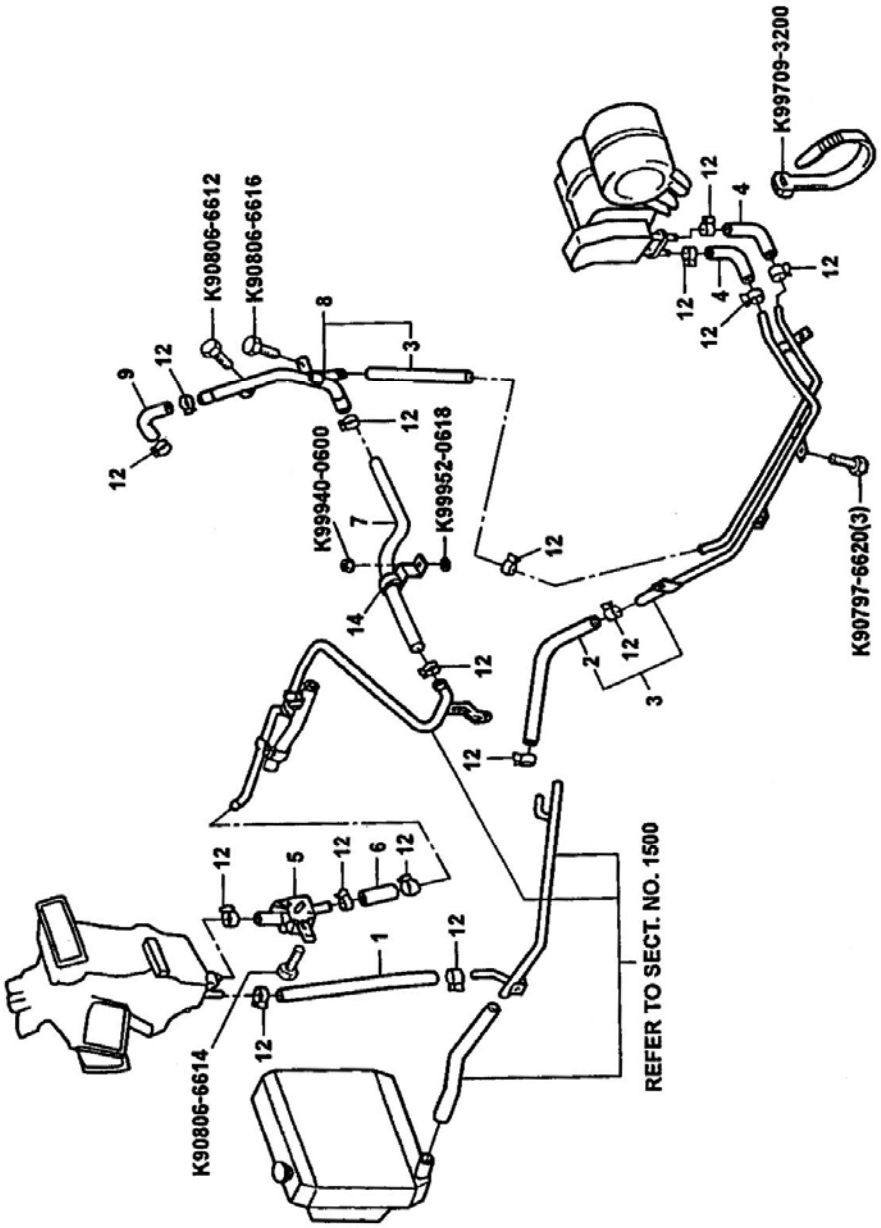

6110D HEATER PIPING (VAN-COACH)

NO	PART NAME	PART NUMBER	ALL	TRK	VAN	COH	NOTE
1	HEATER OUTLET NO.1 HOSE	AA110-61-314A			1	1	DOO WON
		AA111-61-314A			1	1	POONG SUNG
2	HEATER OUTLET NO.2 HOSE	AA113-61-341A				1	DOO WON
		AA114-61-314A				1	POONG SUNG
3	HEATER OUTLET PIPE	AA113-61-349				1	DOO WONG
		AA161-61-349				1	LPG: DOO WON
		AA114-61-349				1	POONG SUNG
		AA162-61-349				1	LPG: POONG SUNG
4	REAR HEATER HOSE	AA113-61-343A				2	DOO WON
		AA143-61-343A P12				2	CASH BOX
		AA114-61-343A				2	POONG SUNG
		AA114-61-343 P12				2	CASH BOX
5	WATER HOSE & VALVE	AA110-61-336			1	1	DOO WON
		AA111-61-336 AA111-61-313B			1	1	POONG SUNG
6	HEATER INLET NO.4 HOSE	AA110-61-313B			1	1	DOO WON
		AA111-61-336			1	1	POONG SUNG
7	HEATER INLET NO.5 HOSE	AA113-61-312D			1	1	DOO WON
		AA110-61-312C			1		LPG: DOO WON
		AA114-61-312D			1	1	POONG SUNG
		AA111-61-312B			1		LPG: POONG

6110D HEATER PIPING (VAN-COACH)

NO	PART NAME	PART NUMBER	ALL	TRK	VAN	COH	NOTE
		AA111-61-312B			1		LPG: POONG SUNG
8	HEATER WATER NO.2 PIPE	AA110-61-220			1	1	DOO WON
		AA11-61-220A			1	1	POONG SUNG
		AA113-61-220A			1	1	LPG: DOO WON
		SS114-61-220S			1	1	LPG: POONG SUNG
9	HEATER INLET NO.1 HOSE	AA110-61-311A			1	1	DOO WON
		AA111-61-311A			1	1	POONG SUNG
12	CLIP	K99282-2200			9	12	
13	HEATER OUTLET NO.6 HOSE	AA113-61-344				1	DOO WON
		AA114-61-344				1	POONG SUNG
14	CLAMP	AA110-61-211A			1	1	DOO WON
		AA111-61-211			1	1	POONG SUNG

6110E **REAR HEATER**

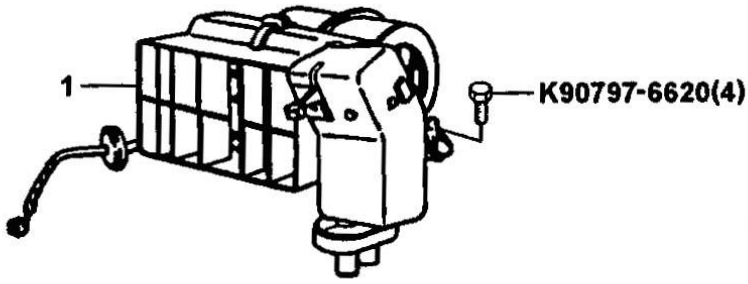

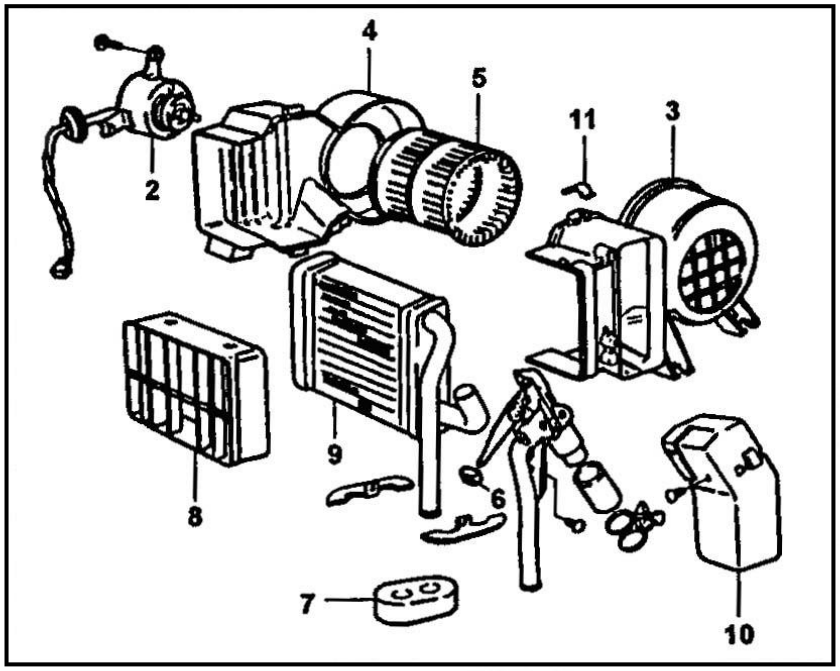

6110E REAR HEATER

NO	PART NAME	PART NUMBER	ALL	TRK	VAN	COH	NOTE
1	REAR HEATER UNIT	AA113-61-340C				1	DOO WON
		AA114-61-340C				1	POONG SUNG
2	REAR HEATER MOTOR	AA113-61-131				1	DOO WON
		AA114-61-131				1	POONG SUNG
3	CASE RH	K72090-0530				1	DOO WON
		76001-2050				1	POONG SUNG
4	CASE LH	K72090-0520				1	DOO WON
		76001-2060				1	POONG SUNG
5	FAN BLOWER	K72090-0790				1	DOO WON
		76201-2040				1	POONG SUNG
6	KNOB CONTROLL	K72090-0740				1	DOO WON
		26920-2010				1	POONG SUNG
7	PACKING	K72090-0850				1	DOO WON
		86223-2310-1				1	POONG SUNG
8	AIR DUCT	K72090-0540				1	DOO WON
		76013-2010				1	POONG SUNG
9	HEATER CORE	K72090-0590				1	DOO WON
		16100-2020				1	POONG SUNG
10	COVER PLATE	K72090-0560				1	DOO WON
		76011-2020				1	POONG SUNG

6110E REAR HEATER

NO	PART NAME	PART NUMBER	ALL	TRK	VAN	COH	NOTE
11	CLIP	K72090-0690				4	DOO WON
		86205-2010				4	POONG SUNG

6120A AIR CONDITIONER (DOO-WON, VAN-COACH)

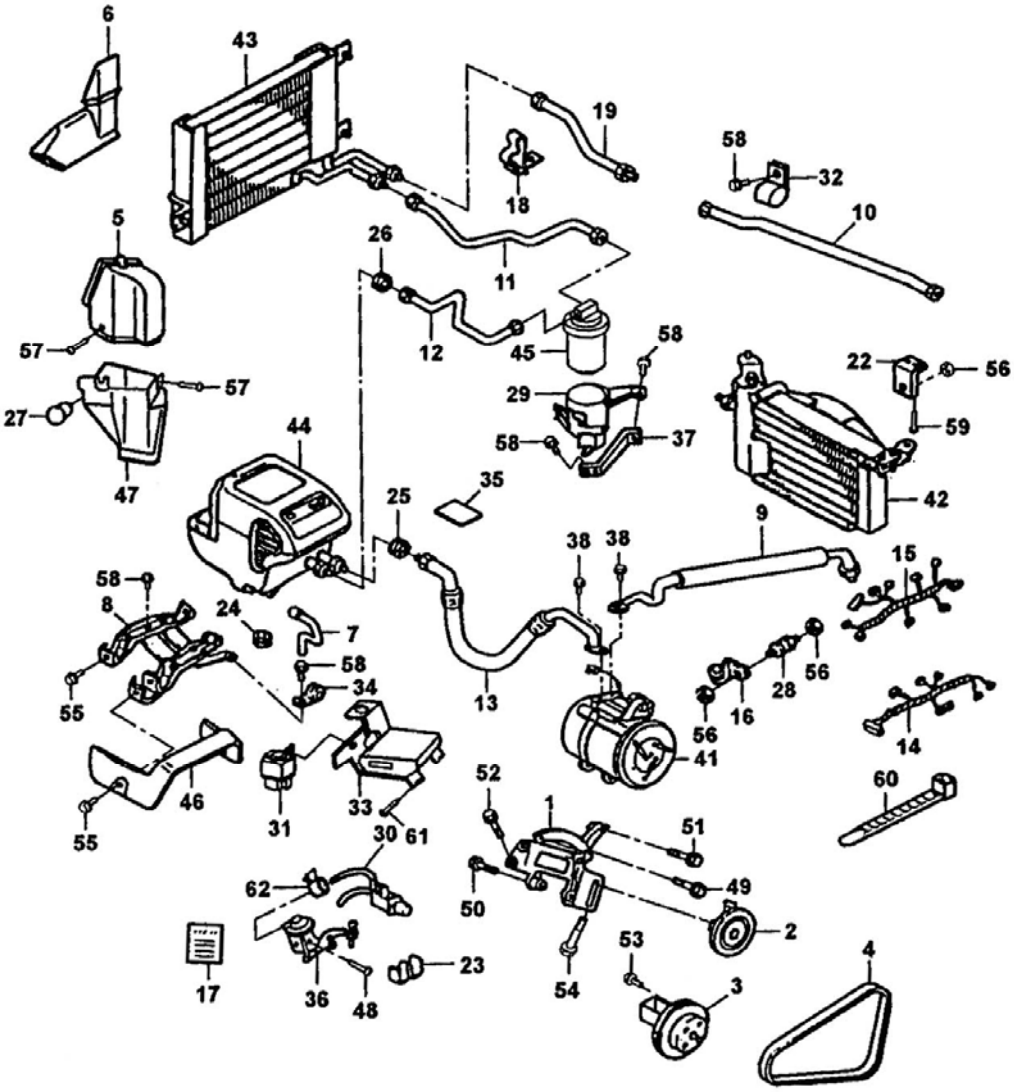

6120A AIR CONDITIONER (DOO-WON, VAN-COACH)

NO	PART NAME	PART NUMBER	ALL	TRK	VAN	COH	NOTE
1	COMPRESSER MOUNTING BRACKET	AA110-15-810A			1	1	
		AA16A-15-810			1	1	LPG
2	IDLE PULLEY	AA110-15-940			1	1	
		AA16A-15-940			1	1	LPG
3	CRANKSHAFT PULLEY	AA110-11-402			1	1	
4	A/C "V" BELT	AA110-15-909			1	1	
		AA16A-15-909A			1	1	LPG
5	AIR DUCT SUB ASM	AA110-61-536B			1	1	
6	AIR HEATER DUCT ASM	AA110-61-538			1	1	
7	DRAIN HOSE	AA110-61-526			1	1	
8	COOLER UNIT BRACKET	AA110-61-521			1	1	
9	DISCHARGE HOSE	AA119-61-461B			1	1	
		AA163-61-461C			1	1	LPG
10	LIQUID PIPE 1	AA119-61-464A			1	1	
11	LIQUID PIPE 11	AA119-61-465B			1	1	
12	LIQUID PIPE 12	AA119-61-466B			1	1	
		AA163-61-466B			1	1	LPG
13	SUCTION HOSE	AA119-61-835A			1	1	
		AA163-61-838B			1	1	LPG
14	ENGINE COOLER WIRING HARNESS	AA110-61-545C			1	1	
15	AMP COOLER WIRING HARNESS	AA110-61-540D			1	1	
		AA161-61-540A			1	1	LPG
		AW100-61-540C			1	1	MPI
16	CLAMP	AA110-61-472			1	1	
17	CAUTION LABEL	AA119-61-599			1	1	
18	CLAMP	AA110-61-474			1	1	
19	LIQUID PIPE 2	AA119-61-469A			1	1	
22	MAIN BRACKET	AA110-61-497			1	1	
26	CLAMP	AA110-61-583			2	2	W/O LPG
27	DUCT CLAMP	AA110-61-585			2	2	
28	BUSHING	AA110-61-481A			1	1	W/O LPG

6120A AIR CONDITIONER (DOO-WON, VAN-COACH)

NO	PART NAME	PART NUMBER	ALL	TRK	VAN	COH	NOTE
29	RECEIVER HOLDER	AA110-61-510B			1	1	
30	SOLENOID VALVE	AA110-61-556C			1	1	W/O LPG
		AAW00-61-556			1	1	EXP
31	RELAY	AA110-61-554			2	2	W/O LPG
32	CLAMP	AA110-61-551			1	1	
33	AMP ASM	AA110-61-551			1	1	W/O LPG
		AW100-61-551			1	1	MPI
34	UNIT PIPE CLAMP	AA110-61-476			1	1	
35	SUCTION PIPE INSULATOR	AA110-61-593A			1	1	
36	ACTUATOR ASM	AA110-61-601			1	1	W/O LPG
37	RECEIVER BRACKET	AA110-61-511A			1	1	
38	BOLT	K99796-0820			2	2	
41	COMPRESSOR ASM	AA119-61-450			1	1	
42	MAIN CONDENSER	AA119-61-490B			1	1	
43	SUB CONDENSER	AA119-61-480A			1	1	
44	UNIT COOLER	AA119-61-520B			1	1	
		AW111-61-520			1	1	MPI
45	RECEIVER TANK	AA171-61-500			1	1	
46	COOLER UNIT COVER	AA110-61-522			1	1	
47	LOWER AIR DUCT SUB ASM	AA110-61-537A			1	1	
48	SCREW & WASHER	K90833-2508			2	2	
49	BOLT & WASHER	K90801-6825			1	1	
50	BOLT & WASHER	K91651-60840			2	2	
51	BOLT & WASHER	AA110-61-479			2	2	
52	BOLT & WASHER	D91651-61030			2	2	
53	BOLT & WASHER	AA110-11-405A			4	4	
54	BOLT	AA110-61-483			1	1	
55	BOLT & WASHER	AA110-61-485			5	5	
56	NUT	K99940-0602			3	3	
57	SCREW (TAPPING)	AA110-61-487			2	2	
58	BOLT & WASHER	D93385-16016			12	12	
59	SCREW (TAPPING)	AA110-61-488			2	2	

6120A AIR CONDITIONER (DOO-WON, VAN-COACH)

NO	PART NAME	PART NUMBER	ALL	TRK	VAN	COH	NOTE
60	BAND CLAMP	K99709-3140			8	8	
61	SCREW (TAPPING)	K99865-0512			3	3	
62	CLIP	K99283-0600			1	1	
KIT-1	COOLER KIT	AA119-62-980			1	1	
		AW111-61-980			1	1	MPI

6120B AIR CONDITIONER (DOO-WON, TRUCK-LPG)

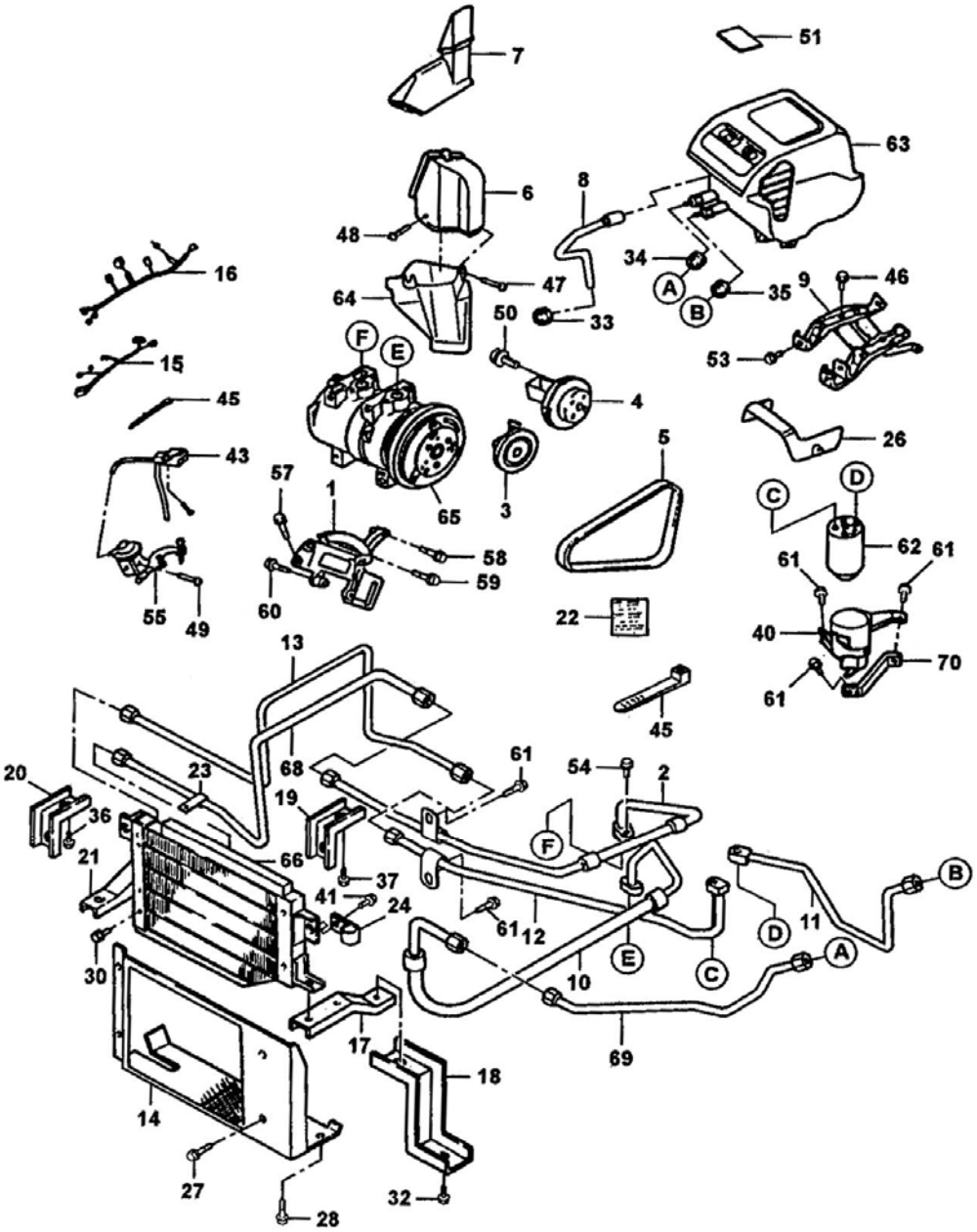

6120B AIR CONDITIONER (DOO-WON, TRUCK-LPG)

NO	PART NAME	PART NUMBER	ALL	TRK	VAN	COH	NOTE
1	COMPRESSOR MOUNTING BRACKET	AA16A-15-810		1			
2	DISCHARGE HOSE	AA16B-61-461C		1			
3	IDLE PULLEY ASM	AA16A-15-940		1			
4	CRANKSHAFT PULLEY	AA110-11-402		1			
5	A/C "V" BELT	AA16A-15-909		1			
6	AIR"UP" DUCT SUB ASM	AA110-61-536B		1			
7	AIR DUCT SUB ASM	AA110-61-538		1			
8	DRAIN HOSE	AA110-61-526		1			
9	COOLING UNIT BRACKET	AA110-61-521		1			
10	SUCTION HOSE	AA16B-61-835D		1			
11	LIQUID PIPE C	AA163-61-466B		1			
12	LIQUID PIPE B	AA16B-61-465B		1			
13	LIQUID PIPE A	AA16B-61-464C		1			
14	MAIN CONDENSER COVER	AA103-61-491		1			
15	ENGINE COOLER WIRING HARNESS	AA100-61-545E		1			
16	AMP COOLER WIRING HARNESS	AA161-61-540A		1			
17	BRACKET	AA100-61-482		1			
18	BRACKET	AA110-61-497A		1			
19	BRACKET	AA100-61-469		1			
20	BRACKET	AA100-61-489		1			
21	BRACKET	AA100-61-511A		1			
22	LABEL	AA103-61-599		1			
23	CLAMP	AA110-61-471		1			
24	CLAMP	AA100-61-473		2			
26	COOLER UNIT COVER	AA110-61-522		1			
27	BOLT	K99945-0900B		4			
28	BOLT	D93385-16016		2			
29	BOLT	D93385-16016		1			
30	BOLT	AA100-61-479		4			
31	BOLT	K99796-0608		2			
32	BOLT	D93385-16016		1			

6120B AIR CONDITIONER (DOO-WON, TRUCK-LPG)

NO	PART NAME	PART NUMBER	ALL	TRK	VAN	COH	NOTE
33	DRAIN GROMMET	AA110-61-475		1			
34	SUCTION GROMMET	AA110-61-864		1			
35	LIQUID GROMMET	AA110-61-865		1			
36	BOLT	D93385-16016		1			
37	BOLT	D93385-16016		1			
38	BOLT	D93385-16016		1			
39	NUT	K99940-0602		2			
40	RECIVER HOLDER	AA110-61-510A		1			
41	BOLT	D93385-16016		1			
42	BOLT	D93385-16016		1			
43	SOLENOID VALVE	AA110-61-556C		1			
45	BAND CLAMP	K99709-3140		7			
46	SCREW (TAPPING)	AA110-61-487		1			
47	SCREW	K90833-2508		2			
50	BOLT	AA110-11-405		4			
51	SUCTION TUBE INSULATOR	AA110-61-593A		1			
52	BRACKET	AA100-61-476A		1			
53	BOLT	AA110-61-485		5			
54	BOLT	K99796-0820		1			
55	ACTUATOR ASM	AA110-61-601		1			
56	CLIP	AA100-61-47B		2			
57	BOLT	D91651-61030		2			
58	BOLT	AA110-61-479		2			
59	BOLT	D91651-60840		2			
60	BOLT	K90801-6825		1			
61	BOLT	D93385-16016		7			
62	RECEIVER TANK	AA171-61-500		1			
63	COOLER UNIT ASM	AA119-61-520B		1			
64	AIR DUCT SUB ASM	AA110-61-537A		1			
65	COMPRESSOR ASM	AA103-61-450A		1			
66	MAIN CONDENSER ASM	AA103-61-490B		1			
67	BOLT	K99796-0620		1			
68	DISCHARGE PIP	AA16B-61-462B		1			
69	SUCTION PIPE	AA16B-61-834C		1			
70	RECEIVER BRACKET	AA110-61-511A		1			
71	COOLER KIT	AA16B-61-980		1			

6120C AIR CONDITIONER (DOO-WON, TRUCK)

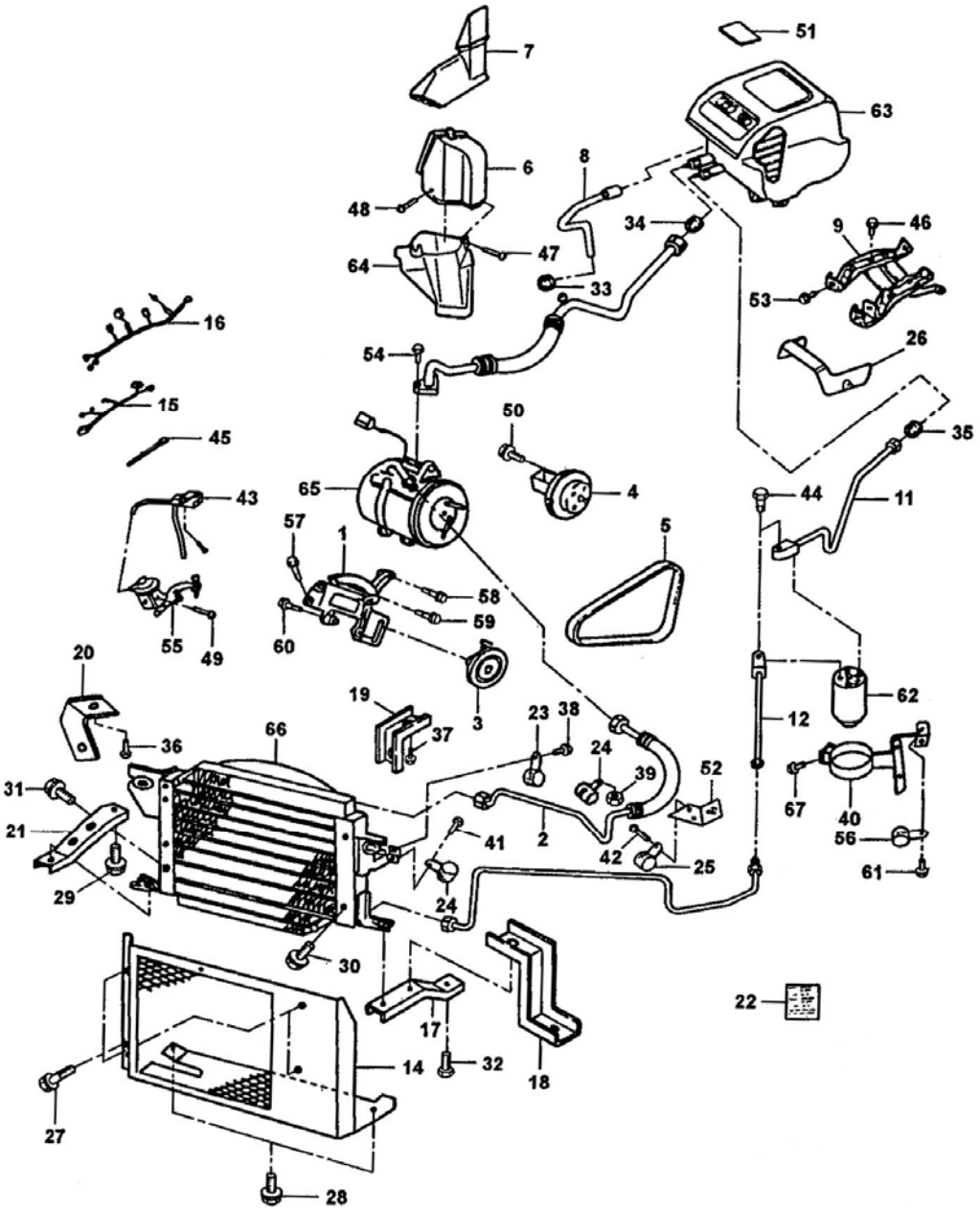

6120C AIR CONDITIONER (DOO-WON, TRUCK)

NO	PART NAME	PART NUMBER	ALL	TRK	VAN	COH	NOTE
1	COMPRESSOR MOUNTING BRACKET	AA100-15-810A		1			
2	DISCHARGE HOSE	AA103-61-461B		1			
3	IDLE PULLEY ASM	AA110-15-940		1			
4	CRANKSHAFT PULLEY	AA110-11-402		1			
5	A/C "V" BELT	AA110-15-909A		1			
6	AIR UP DUCT SUB ASM	AA110-61-536A		1			
7	AIR DUCT SUB ASM	AA110-61-538		1			
8	DRAIN HOSE	AA110-61-526		1			
9	COOLING UNIT BRACKET	AA110-61-521		1			
10	SUCTION HOSE	AA103-61-835B		1			
11	LIQUID PIPE C	AA103-61-466A		1			
12	LIQUID PIPE B	AA103-61-465A		1			
13	LIQUID PIPE A	AA103-61-464A		1			
14	MAIN CONDENSER COVER	AA103-61-491		1			
15	ENGINE COOLER WIRING HARNESS	AA100-61-545E		1			
16	AMP COOLER WIRING HARNESS	AA110-61-540D		1			
		AW100-61-540C		1			MPI
17	BRACKET	AA100-61-482		1			
18	BRACKET	AA110-61-497A		1			
19	BRACKET	AA100-61-469		1			
20	BRACKET	AA100-61-489		1			
21	BRACKET	AA100-64-511A		1			
22	LABEL	AA103-61-599		1			
23	CLAMP	AA110-61-471		1			
24	CLAMP	AA100-61-473		2			
25	CLAMP	AA100-61-472A		1			
26	COOLER UNIT COVER	AA110-61-522		1			
27	BOLT	K99945-0600B		4			
28	BOLT	D93385-16016		2			
29	BOLT	D93385-16016		1			
30	BOLT	AA100-61-479		4			

6120C AIR CONDITIONER (DOO-WON, TRUCK)

NO	PART NAME	PART NUMBER	ALL	TRK	VAN	COH	NOTE
31	BOLT	K99796-0608		2			
32	BOLT	D93385-16016		1			
33	DRAIN GROMMET	AA110-61-475		1			
34	SUCTION GROMMET	AA110-61-864		1			
35	LIQUID GROMMENT	AA110-61-865		1			
36	BOLT	D93385-16016		1			
37	BOLT	D93385-16016		1			
38	BOLT	D93385-16016		1			
39	NUT	K99940-0602		2			
40	RECEIVER HOLDER	AA100-61-510B		1			
41	BOLT	D93385-16016		1			
42	BOLT	D93385-16016		1			
43	VALVE SOLENOID	AA110-61-556C		1			
		AAW00-61-556		1			EXP
44	BOLT	K99796-0628		2			
45	BAND CLAMP	K99709-3140		7			
46	BOLT	D93385-16016		4			
47	SCREW (TAPPING)	AA110-61-487		1			
48	SCREW	K90833-2508		2			
50	BOLT	AA110-11-405		4			
51	SUCTION TUBE INSULATOR	AA110-61-593A		1			
52	BRACKET	AA100-61-476A		1			
53	BOLT	AA110-61-485		5			
54	BOLT	K99796-0820		1			
55	ACTUATOR ASM	AA110-61-601		1			
56	CLIP	AA100-61-478		2			
57	BOLT	D91651-61030		2			
58	BOLT	AA110-61-479		2			
59	BOLT	D91651-60840		2			
60	BOLT	K90801-6825		1			
61	BOLT	D93385-16016		1			
62	RECEIVER TANK	AA119-61-500		1			
63	COOLER UNIT ASM	AA119-61-520B		1			
		AW111-61-520		1			MPI
64	AIR DUCT SUB ASM	AA110-61-537		1			
65	ACOMPRESSOR ASM	AA103-61-450A		1			
66	MAIN CONDENSER ASM	AA103-61-490B		1			

6120C AIR CONDITIONER (DOO-WON, TRUCK)

NO	PART NAME	PART NUMBER	ALL	TRK	VAN	COH	NOTE
67	BOLT	K99796-0620		1			
KIT-1	COOLER KIT	AW100-61-980		1			MPI

6120D AIR CONDITIONER (POONG SUNG)

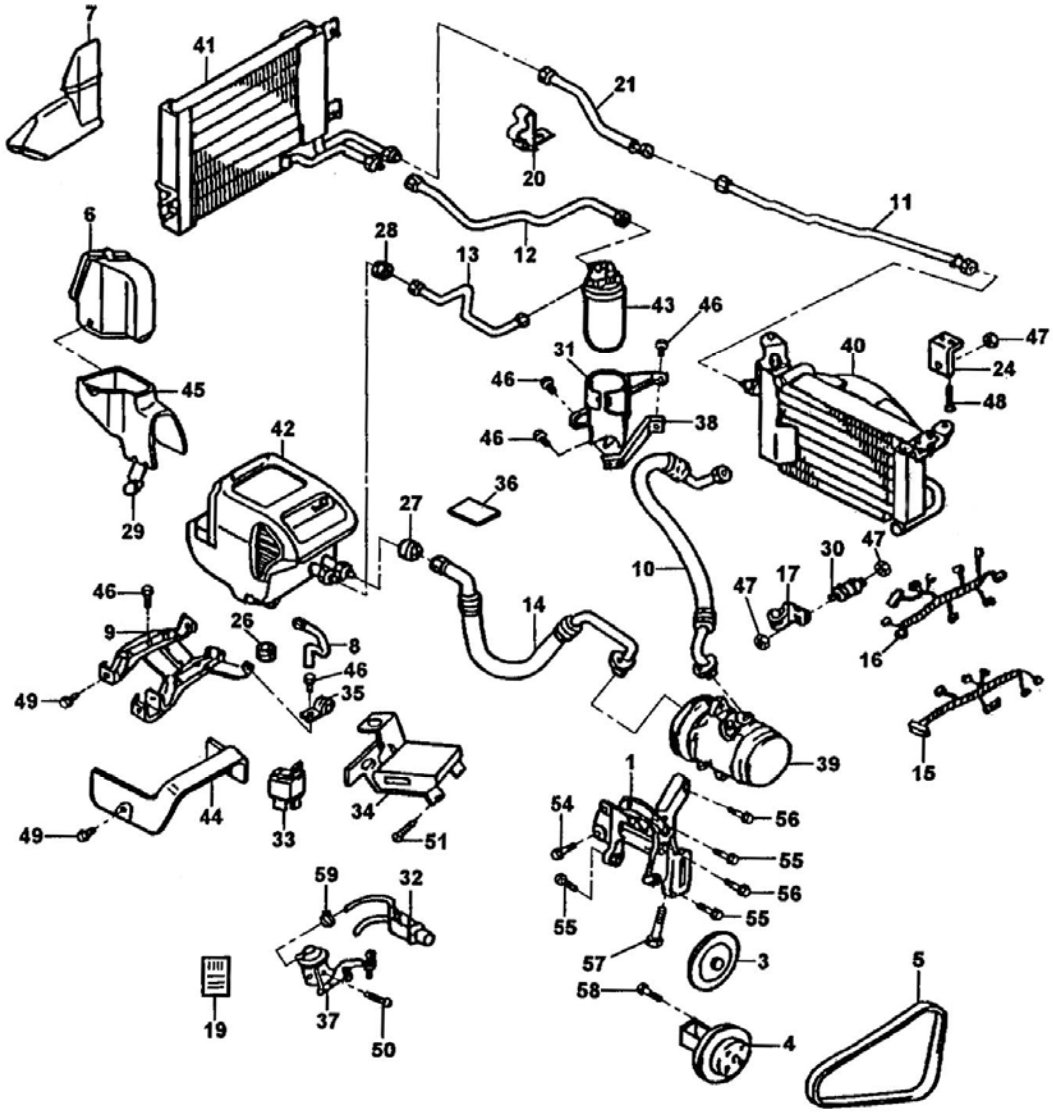

6120D AIR CONDITIONER (POONG SUNG)

NO	PART NAME	PART NUMBER	ALL	TRK	VAN	COH	NOTE
1	COMPRESSOR MOUNTING BRACKET	AA111-15-810A			1	1	
		AA162-15-810			1	1	LPG
3	IDLE PULLEY ASM	AA111-15-940A			1	1	
		AA162-15-940A			1	1	LPG
4	CRANKSHAFT PULLEY	AA111-11-402			1	1	
5	A/C "V" BELT	AA111-15-909			1	1	
		AA162-15-909			1	1	LPG
6	AIR UPPER DUCT ASM	AA111-61-536B			1	1	
7	AIR HEATER DUCT ASM	AA111-61-538			1	1	
8	DRAIN HOSE	AA111-61-526			1	1	
9	COOLING UNIT BRACKET	AA111-61-521			1	1	
10	DISCHARGE HOSE	AA164-61-461B			1	1	LPG
		AA120-61-461A			1	1	
11	LIQUID PIPE 1	AA120-61-464A			1	1	
12	LIQUID PIPE 11	AA120-61-465A			1	1	
13	LIQUID PIPE 12	AA120-61-466A			1	1	
		AA164-61-466A			1	1	LPG
14	SUCTION HOSE	AA119-61-835A			1	1	
		AA120-61-545			1	1	
15	ENGINE COOLER WIRING HARNESS	AA120-61-545			1	1	
16	AMP WIRING HARNESS	AA111-61-540D			1	1	
		AA162-61-540			1	1	LPG
		AW101-61-540			1	1	MPI
17	CLAMP	AA120-61-472			1	1	
18	CAUTION LABEL	AA120-61-599			1	1	
19	CLAMP	AA111-61-474			1	1	
20	CLAMP	AA111-61-474			1	1	
21	LIQUID PIPE 2	AA120-61-469A			1	1	
24	MAIN CONDENSER BRACKET	AA120-61-497			1	1	
25	CLAMP	AA111-61-483A			2	2	W/O LPG

6120D AIR CONDITIONER (POONG SUNG)

NO	PART NAME	PART NUMBER	ALL	TRK	VAN	COH	NOTE
26	DRAIN GROMMET	AA111-61-475			1	1	
27	SUCTION GROMMET	AA111-61-864			1	1	
28	LIQUID GROMMET	AA111-61-865			1	1	
29	DUCT CLAMP	AA111-61-585			2	2	
30	BUSHING	AA111-61-481A			1	1	W/O LPG
31	RECEIVER HOLDER	AA111-61-510B			1	1	
32	SOLENOID VALVE	AA111-61-556B			1	1	W/O LPG
		AAW12-61-556			1	1	EXP
33	RELAY	AA111-61-554			2	2	W/O LPG
34	AMP ASM	AA111-61-551			1	1	W/O LPG
		AW111-61-551			1	1	MPI
35	UNIT PIPE CLAMP	AA111-61-476			1	1	
36	SUCTION PIPE INSULATOR	AA111-61-593			1	1	
37	ACTUATOR ASM	AA111-61-601			1	1	W/O LPG
38	RECEIVER BRACKET	AA111-61-511A			1	1	
39	COMPRESSOR ASM	AA120-61-450			1	1	
40	MAIN CONDENSER	AA120-61-490B			1	1	
41	SUB CONDENSER	AA120-61-480A			1	1	
42	COOLING UNIT	AA120-61-520B			1	1	1
		AW112-61-520			1	1	,PI
43	RECEIVER TANK	AA120-61-500A			1	1	
44	COOLER UNIT COVER	AA111-61-522			1	1	
45	AIR LOWER DUCT ASM	AA111-61-437A			1	1	
46	BOLT & WASHER	D93385-16016			14	14	
47	NUT	K99940-0602			2	2	
48	SCREW (TAPPING)	AA110-61-488			2	2	
49	BOLT & WASHER	AA110-61-485			5	5	
50	SCREW & WASHER	K90833-2508			2	2	
51	SCREW (TAPPING)	K99865-0512			3	3	
52	BOLT & WASHER	D91651-61030			2	2	
53	BOLT & WASHER	D91651-60840			3	3	
54	BOLT & WASHER	AA110-61-479			2	2	

6120D AIR CONDITIONER (POONG SUNG)

NO	PART NAME	PART NUMBER	ALL	TRK	VAN	COH	NOTE
55	BOLT	AA110-61-483			1	1	
56	BOLT & WASHER	AA110-11-405			4	4	
57	CLIP	K99283-0600			1	1	
KIT-1	COOLER KIT	AA120-61-980			1	1	
		AW120-61-980			1	1	MPI

6120E COOLER UNIT & MAIN CONDENSER (DOO WON- VAN & COACH)

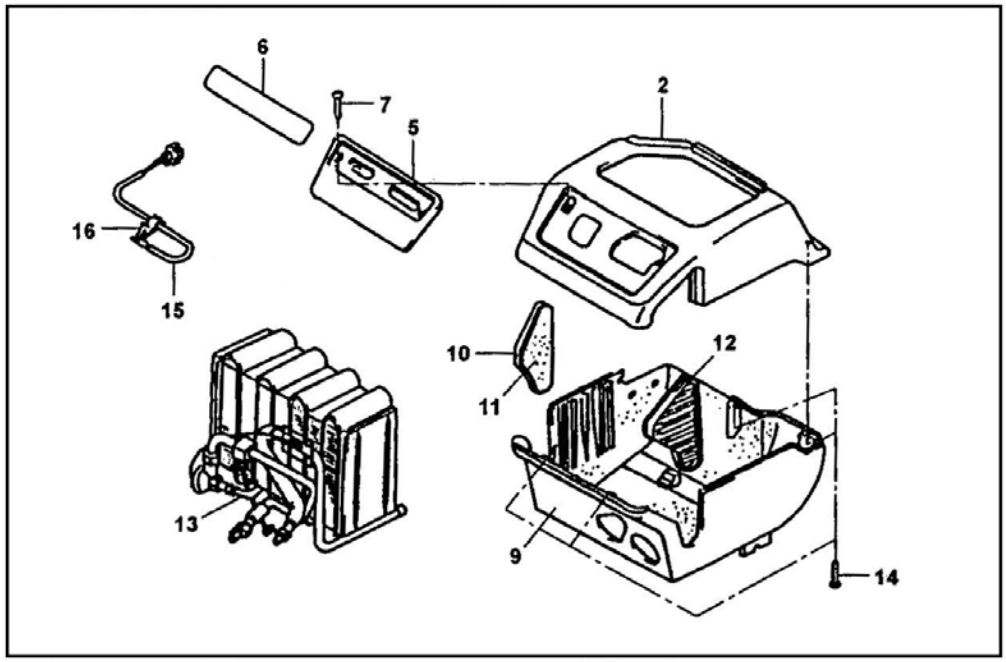

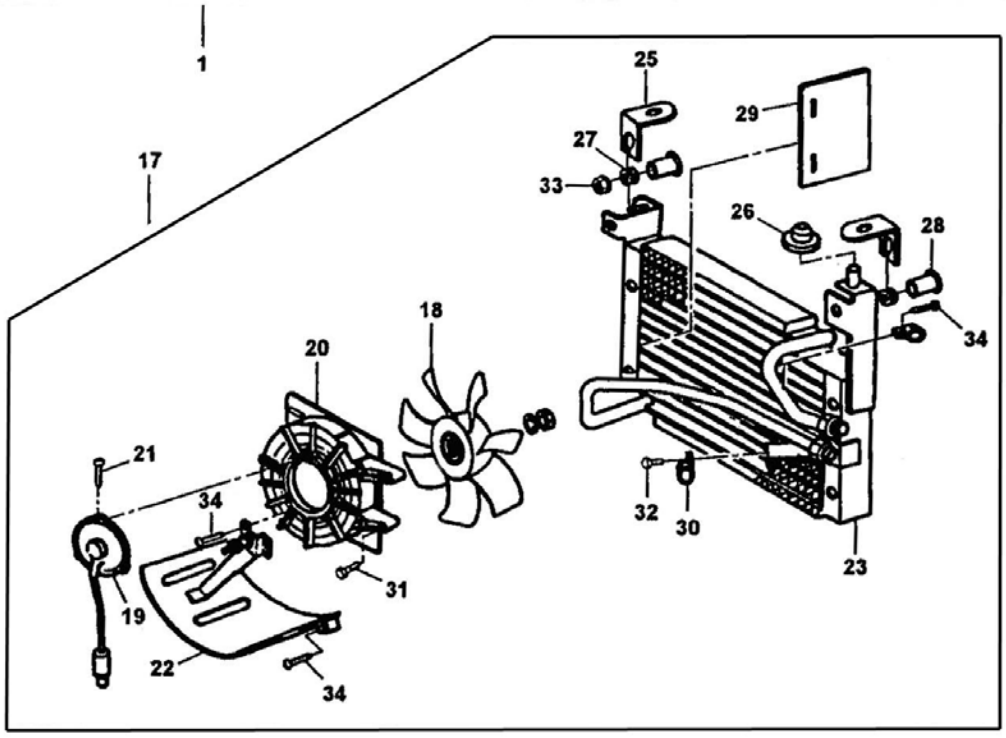

6120E COOLER UNIT & MAIN CONDENSER (DOO WON- VAN & COACH)

NO	PART NAME	PART NUMBER	ALL	TRK	VAN	COH	NOTE
1	COOLER UNIT	AA119-61-520B			1	1	
		AW111-61-520			1	1	MPI
2	UPPER CASE	K30241-0530			1	1	
5	COVER	K40852-0551			1	1	
6	PANEL	K46032-0410			1	1	
7	SCREW (TAPPING)	012114-1241			2	2	
9	LOWER CASE	K30241-0540			1	1	
10	COVER LH	K40852-0540			1	1	
11	FILTER	K42012-0030			2	2	
12	COVER RH	K40852-0520			1	1	
13	EVAPORATOR ASM	K30081-0184			1	1	
14	SCREW (TAPPING)	012114-1441			4	4	
15	EVAPORATOR SENSOR ASM	AA110-61-552 (*K30382-0181*)			1	1	VENDOR NUMBER
16	CLIP	K40882-0470			1	1	
17	MAIN CONDENSER	AA119-61-490B			1	1	
18	FAN	K42022-0130			1	1	
19	MOTOR	K44820-0190			1	1	
20	SHROUD	K47052-0151			1	1	
21	SCREW TAPPING	012525-1240			3	3	
22	COVER ASM	K30402-0032			1	1	
23	MAIN CONDENSER CORE ASM	K30031-0381			1	1	
25	MOUNTING BRACKET	K40432-4350			3	3	
26	GROMMET	K42422-0200			1	1	
27	GROMMET	K42422-0070			3	3	
28	BUSHING	K40422-0031			3	3	
29	AIR GUIDE	K40012-0191			1	1	
30	CLIP	K40822-2231			2	2	
31	BOLT	010006-6070			4	4	
32	BOLT	020146-1640			1	1	
33	NUT	K45232-0260			3	3	
34	SCREW (TAPPING)	012525-12400			5	5	

6120F COOLER UNIT & MAIN CONDENSER (DOO WON- TRUCK)

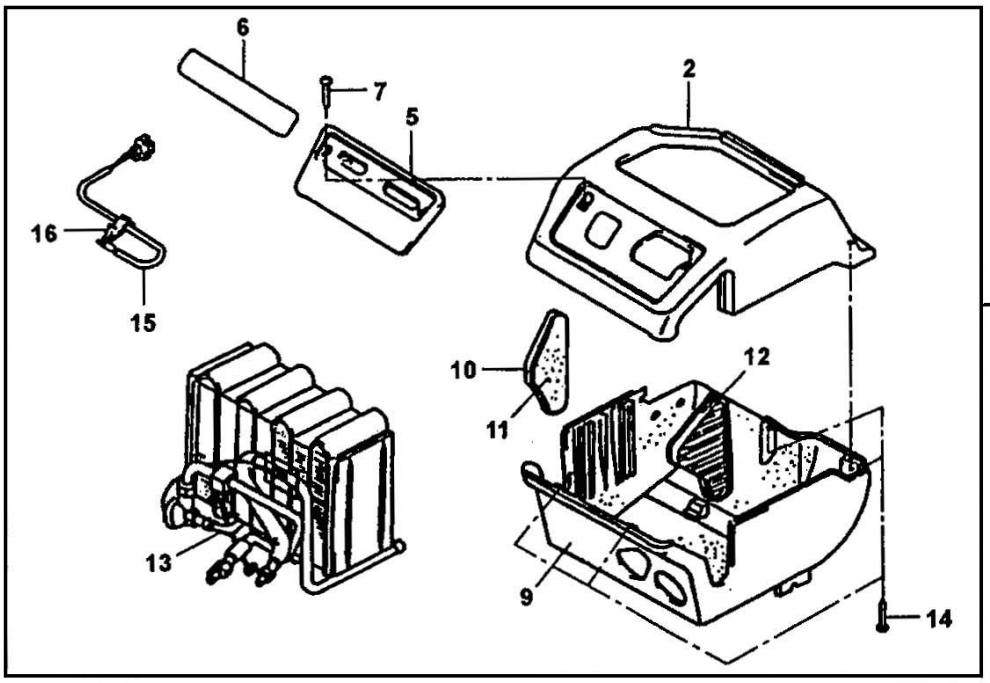

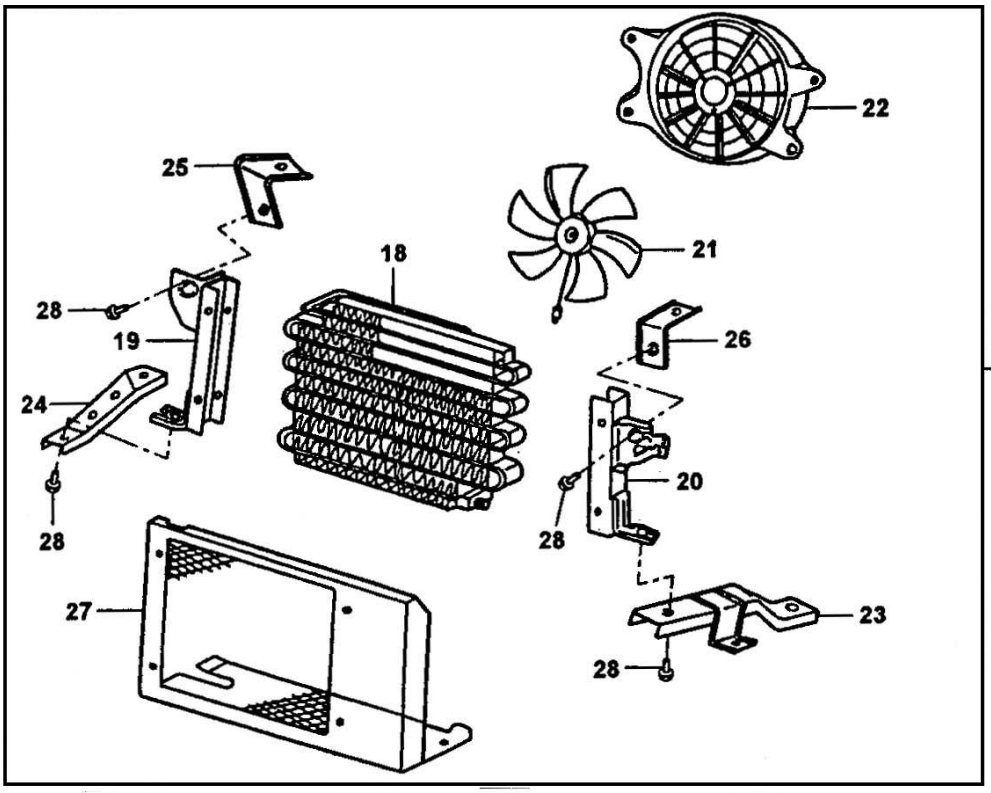

6120F COOLER UNIT & MAIN CONDENSER (DOO WON- TRUCK)

NO	PART NAME	PART NUMBER	ALL	TRK	VAN	COH	NOTE
1	COOLER UNIT	AA119-61-520B		1			
		AW111-61-520		1			MPI
2	UPPER CASE	K30241-0530		1			
5	COVER	K40852-0551		1			
6	PANEL	K46032-0410		1			
7	SCREW (TAPPING0	012114-1241		2			
9	LOWER CASE	K30241-0540		1			
10	COVER LH	K40852-0540		1			
11	FILTER	K42012-0030		2			
12	COVER RH	K40852-0520		1			
13	EVAPORATOR ASM	K30071-0184		1			
14	SCREW (TAPPING)	012114-1441		4			
15	EVAPORATOR SENSOR ASM	AA110-61-552 (*K30382-0181*)		1			VENDOR NO
16	CLIP	K40882-0470		1			
17	MAIN CONDENSER ASM	AA103-61-490B		1			
18	MAIN CONDENSER CORE ASM	K30031-0401		1			
19	END PLATE LH	K41612-1360		1			
20	END PLATE RH	K41612-1380		1			
21	MOTOR FAN ASM	K30042-0171		1			
22	SHROUD	K47052-0151		1			
23	BRACKET	K40432-8800		1			
24	BRACKET	K40432-5732		1			
25	BRACKET	K40432-5740		1			
26	BRACKET	K40432-5750		1			
27	CONDENSER COVER ASM	K30402-0111		1			
28	BOLT	99784-0620		4			

6120G COOLER UNIT & MAIN CONDENSER (POONG-SUNG)

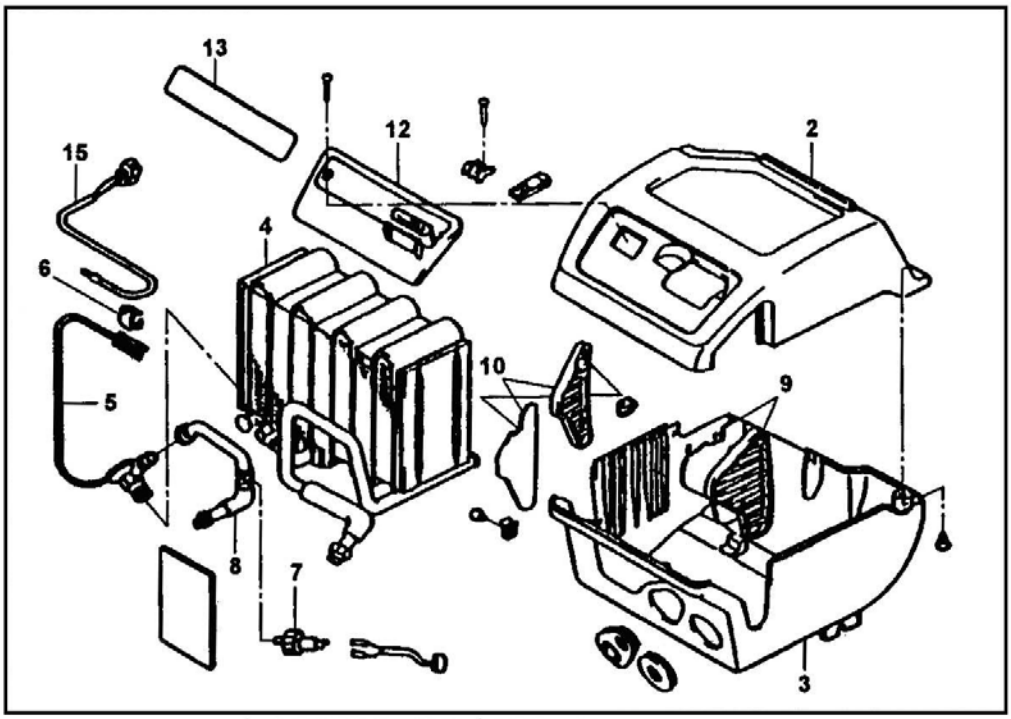

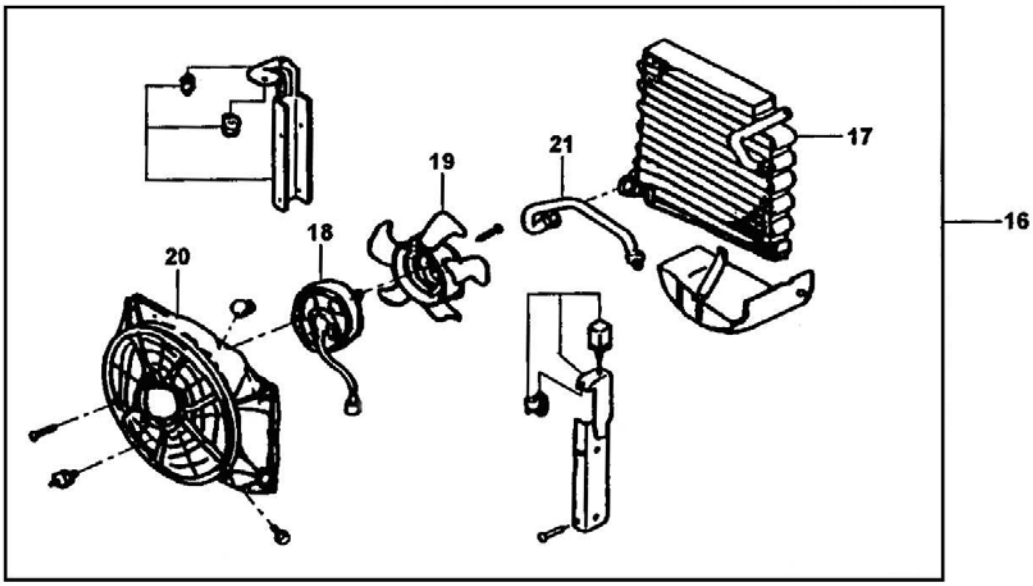

6120G COOLER UNIT & MAIN CONDENSER (POONG-SUNG)

NO	PART NAME	PART NUMBER	ALL	TRK	VAN	COH	NOTE
1	COOLING UNIT	AA120-61-520B			1	1	
		AW112-61-520			1	1	MPI
2	UPPER CASE ASM	25401-1050			1	1	
3	LOWER CASE ASM	25401-1040			1	1	
4	EVAPORATOR ASM	25421-5020			1	1	
5	EXPANSION VALVE	25431-5010			1	1	
6	BULB HOLDER	75455-1040			1	1	
7	PRESSURE SWITCH	AA120-61-555 (*25713-5010*)			1	1	VENDOR NO
8	LIQUID TUBE	25604-5090			1	1	
9	COVER ASM RH	25412-1040			1	1	
10	COVER ASM LH	25412-1030			1	1	
12	COVER	75418-1080			1	1	
13	ORNAMENT	75450-1020			1	1	
15	THERMISTER	AA110-61-552			1	1	
16	MAIN CONDENSER	AA120-61-490			1	1	
17	CONDENSER SUB ASM	25326-5010			1	1	
18	FAN MOTOR ASM	25331-1020			1	1	
19	FAN	25330-1010			1	1	
20	SHROUD	25303-1120			1	1	
21	DISCHARGE TUBE	25320-5010			1	1	

6200 BACK DOOR (BODY & TRIM)

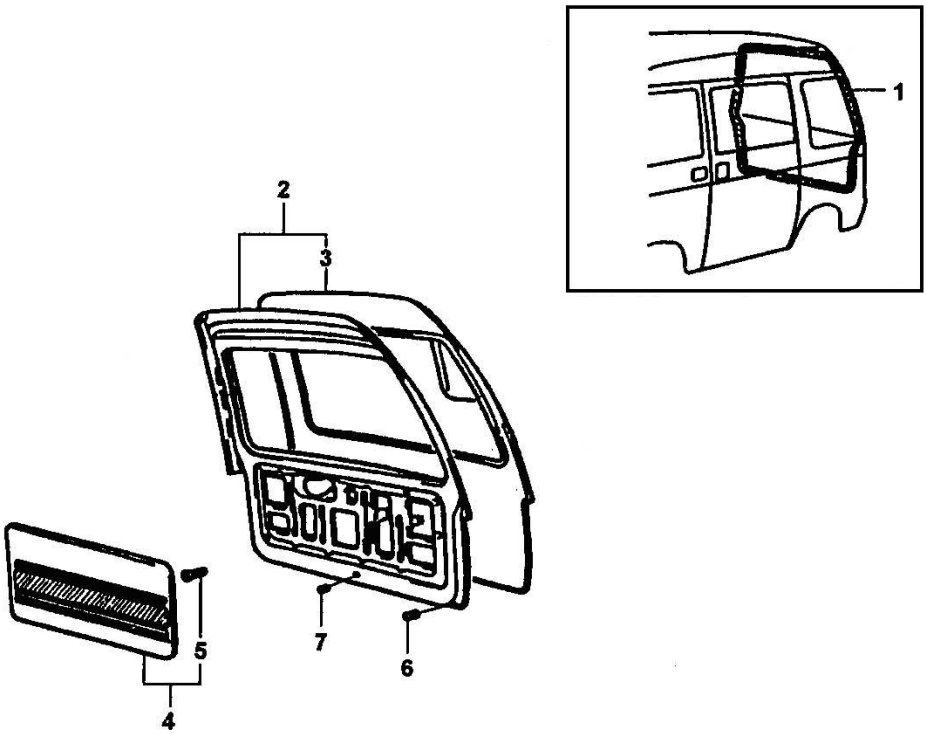

6200 BACK DOOR (BODY & TRIM)

NO	PART NAME	PART NUMBER	ALL	TRK	VAN	COH	NOTE
1	BACK DOOR WEATHERSTRIP	AA110-62-761			1	1	
2	BACK DOOR SUB PANEL ASM	AA110-62-010A				1	STD
		AA111-62-010A			1		
		AA113-62-010				1	5COH: DLX
		AA120-62-010			1		OPT
		AA114-62-010A				1	SDX, MULTI
		AA119-62-010A				1	OPT: SDX: MULTI
		AA150-62-010A				1	OPT: DLX: 5COH
3	BACK DOOR OUTSIDE PANEL	AA110-62-031			1	1	COH: STD
		AA113-62-031				1	COH: DLX
		AA116-62-031			1		OPT
		AA114-62-031				1	SDX: MULTI
		AA150-62-031				1	
4	BACK DOOR TRIM ASM	AA111-68-810B			1	1	
5	FASTENER	AA100-68-401			15	15	
6	CUSHION	AA100-56-872			4	4	
7	HOLE PLUG	AA110-56-501A			1	1	

6310 WINDOW GLASS

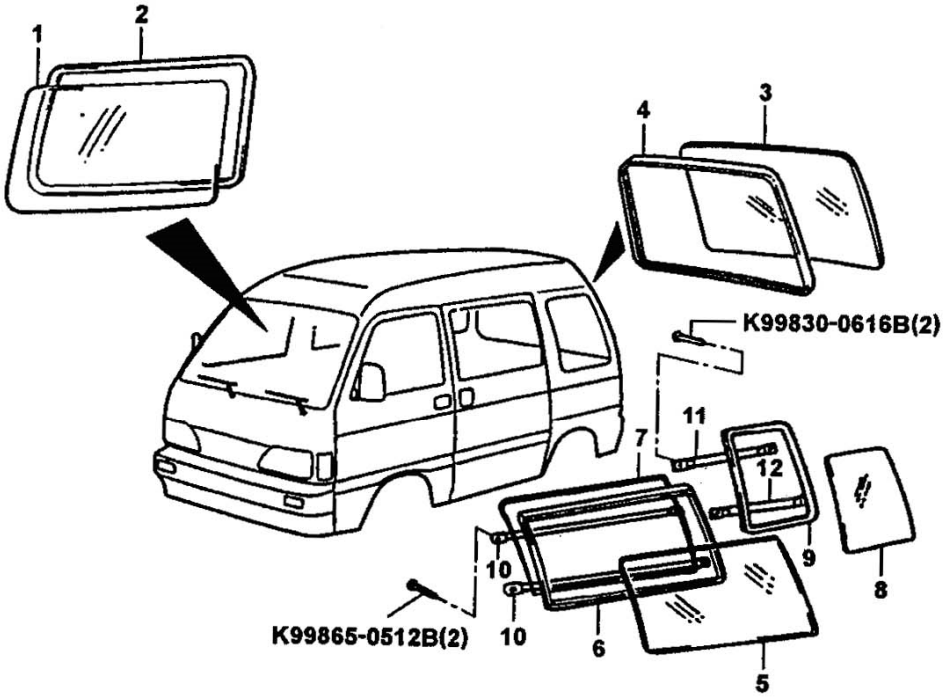

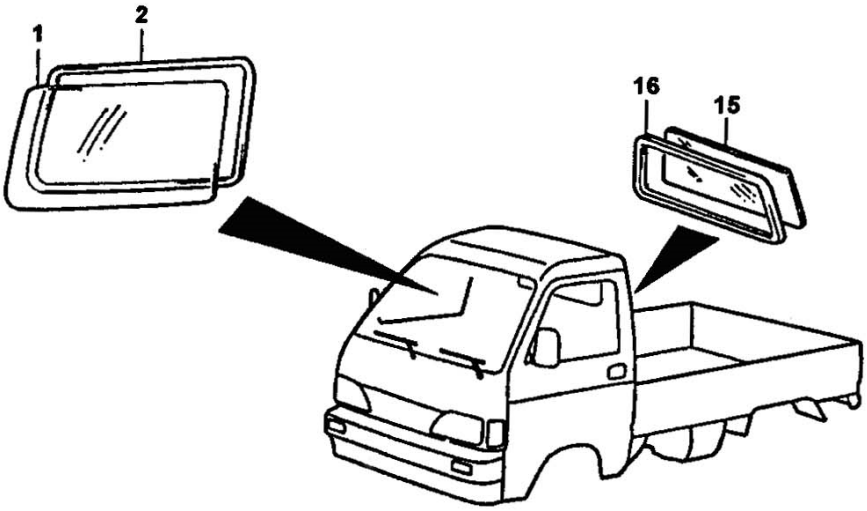

6310 WINDOW GLASS

NO	PART NAME	PART NUMBER	ALL	TRK	VAN	COH	NOTE
1	WINDSHIELD GLASS	AA100-63-901	1				
		AA114-63-901	1				OPT: COLOR GLASS
2	WINDSHIELD WEATHERSTRIP	AA100-63-902A	1				
3	BACK WINDOW GLASS	AA110-63-931			1	1	DOM: VAN:EXP VAN, COH, STD, DLX
		AA111-63-931B				1	HEATED SDX
		AA114-63-931B				1	COLOR: SDX
		AA117-63-932					OPT: VAN:EXP VAN, COH, STD, DLX
4	BACK WINDOW WEATHERSTRIP	AA110-63-932			1	1	
5	REAR DOOR GLASS LH	AA115-72-502			1		2VAN
		AA120-72-502			1		OPT: COLOR SDX 2VAN
	REAR DOOR GLASS RH	AA115-72-503			1		2VAN
		AA120-72-503			1		OPT: COLOR SDX 2VAN
6	REAR DOOR WEATHERSTRIP LH	AA115-63-942A			1		2VAN
	REAR DOOR WEATHERSTRIP RH	AA115-63-943A			1		2VAN
7	OUTER WEATHERSTRIP	AA115-72-944			2		2VAN

6310 WINDOW GLASS

NO	PART NAME	PART NUMBER	ALL	TRK	VAN	COH	NOTE
8	QUARTER GLASS LH	AA112-63-501			1	1	VAN
		AA114-63-501				1	OPT: COLOR
	QUARTER GLASS RH	AA112-63-502			1	1	VAN
		AA114-63-502			1	1	OPT: COLOR
9	QUARTER WINDOW WEATHERSTRIP	AA112-63-942B			2	2	W/O PANEL VAN
10	CENTER GUARD RAIL	AA110-69-551A			4		
						2	5COH: CASH BOX
11	UPPER QUARTER GUARD RAIL LH	AA110-69-573A			1		VAN
	UPPER QUARTER GUARD RAIL RH	AA110-69-571A			1		VAN
12	LOWER QUARTER GUARD RAIL LH	AA110-69-574A			1		VAN
	LOWER QUARTER GUARD RAIL RH	AA110-69-572A			1		VAN
15	BACK WINDOW GLASS	AA100-63-931A		1			
16	BACK WINDOW WEATHERSTRIP	AA100-63-932B		1			

6320 BACK DOOR MECHANISM

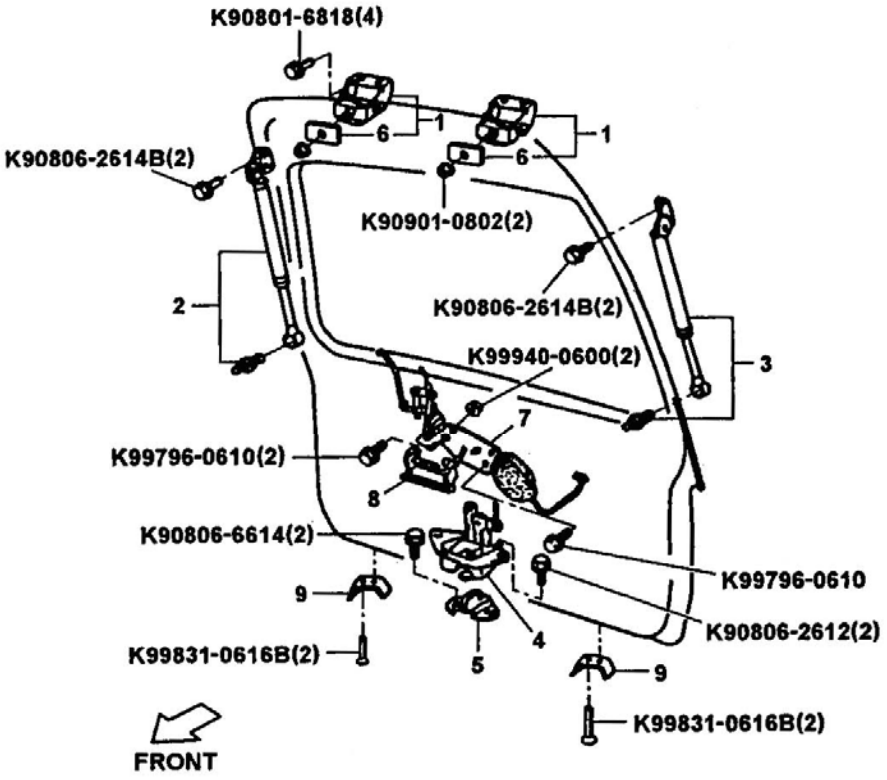

6320 BACK DOOR MECHANISM

NO	PART NAME	PART NUMBER	ALL	TRK	VAN	COH	NOTE
1	BACK DOOR HINGE SUB ASM	AA110-62-210			2	2	COH: STD
	BACK DOOR HINGE SUB ASM LH	AA110-62-210				1	DLX: SDX
	BACK DOOR HINGE SUB ASM RH	AA114-62-210				1	DLX: SDX
2	BACK DOOR STAY ASM RH	AA110-62-610B				1	STD
		AA114-62-610B			1	1	DLX: SDX
3	BACK DOOR STAY ASM LH	AA110-63-610B				1	STD
		AA114-63-610B			1	1	DLX: SDX
4	BACK DOOR LOCK ASM	AA110-62-310			1	1	
5	BACK DOOR LOCK STRIKER ASM	AA110-62-361A AA110-62-361B			1	1	
6	BACK DOOR HINGE PACKING	AA110-62-212			2	2	
7	REMOTE CONTROLLER	AA110-62-380				1	STD
		AA114-62-380A			1	1	DLX: SDX
8	OUTER HANDLE ASM	KK710-62-410			1	1	
9	BACK DOOR DOVETAIL	AA110-62-711A			2	2	

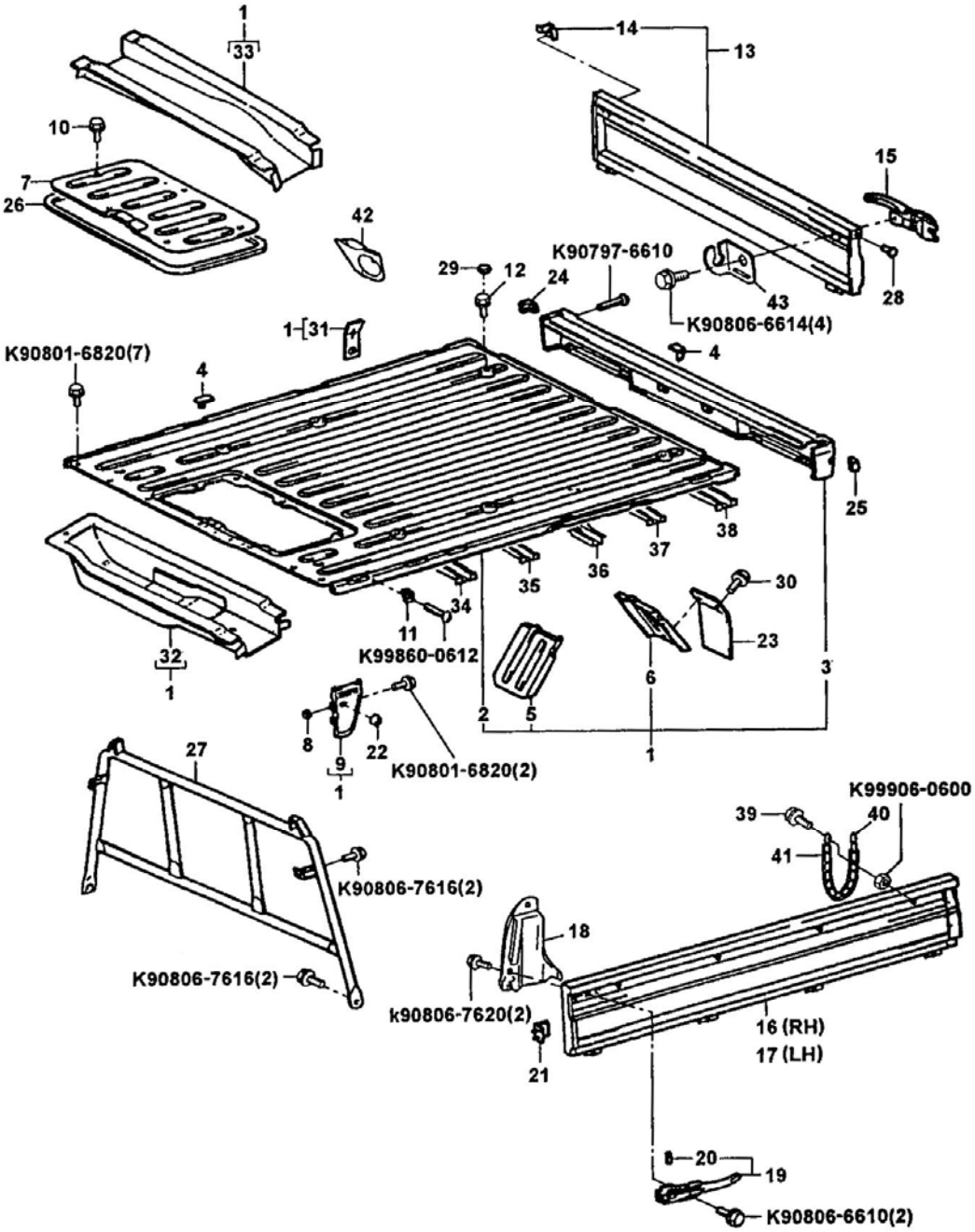
1
33
10
7
26
42
14
13
15
28
29
12
24
K90797-6610
43
K90806-6614(4)
1
31
K90801-6820(7)
4
4
25
38
37
36
35
34
30
23
11
K99860-0612
32
1
6
3
2
5
1
8
9
1
22
K90801-6820(2)
27
K90806-7616(2)
K90806-7616(2)
K99906-0600
39
40
41
18
k90806-7620(2)
21
16 (RH)
17 (LH)
20
19
K90806-6610(2)

6500 TRUCK BED

NO	PART NAME	PART NUMBER	ALL	TRK	VAN	COH	NOTE
1	REAR BODY FLOOR SUB ASM	AA100-65-100E		1			
		AA13B-65-100J		1			LPG
		AA13D-65-100C		1			LONG CARGO
2	REAR FLOOR PANEL	AA100-65-101D		1			
		AA100-65-101D P34		1			EXP
		AA13D-65-101B		1			LONG CARGO
3	REAR CROSS SILL SUB ASM	AA100-65-250B		1			
4	ROPE LOWER HOOK	AA100-65-231		8			
5	REAR FENDER FRONT RH PANEL	AA100-65-320		1			
	REAR FENDER FRONT LH PANEL	AA100-65-420A		1			
6	REAR FENDER REAR RH PANEL	AA100-65-310		1			
	REAR FENDER REAR LH PANEL	AA100-65-910		1			
7	ENGINE SERVICE HOLE COVER	AA100-65-350B		1			
8	REAR BODY SET PACKING	AA100-65-366		4			
9	FLOOR FRONT CORNER PANEL RH	AA100-65-406B		1			
	FLOOR FRONT CORNER PANEL LH	AA100-65-506B		1			
10	BOLT & WASHER	AA100-56-892		5			
11	SCREW GROMMET	AA100-69-361		2			
12	BOLT & WASHER	D91651-41028		8			
13	REAR BODY TAIL GATE SUB ASM	AA100-65-800B		1			STD: LONG CARGO
		AA101-65-600		1			DLX, SDX: LONG CARGO, DLX,SDX
14	ROPE HOOK	AA100-65-701		2			

NO	PART NAME	PART NUMBER	ALL	TRK	VAN	COH	NOTE
15	TAIL GATE LATCH SUB ASM	AA100-65-710		2			
16	REAR BODY SIDE GATE RH	AA100-65-400C		1			
		AA13D-65-400A		1			LONG CARGO
17	REAR BODY SIDE GATE LH	AA100-65-500C		1			
		AA13D-65-500		1			LONG CARGO
18	SIDE GATE LATCH RH	AA101-65-360		1			
	SIDE GATE LATCH LH	AA101-65-370		1			
19	SIDE GATE LATCH SUB ASM	AA100-65-720		2			
20	GATE LOCK SILENCER	AA100-65-365		2			
21	SIDE GATE RUBBER CUSHION	AA100-65-056		2			
22	RUBBER CUSHION	AA100-65-057		2			
23	REAR FLAP (MUD)	AA1000-51-871D		2			
24	GATE CUSHION RH	AA100-65-054B		1			
25	GATE CUSHION LH	AA100-65-055B		1			
26	ENGINE COVER SEAL	AA100-56-217		1			
27	REAR BODY FRAME ASM	AA101-65-810C		1			
28	HOLE PLUG	AA100-56-054		2			
29	HOLE PLUG	AA100-56-052		8			
				10			LONG CARGO
30	BOLT & WASHER	AA100-51-893		8			
31	FILLER BRACKET LPG	AA13B-65-111E		1			LPG
32	SIDE NO.1 SILL ASM	AA100-65-170A		1			
33	SIDE NO.2 SILL ASM	AA100-65-180A		1			
34	NO.1 CROSS SILL SUB ASM	AA13D-65-130A		1			
35	NO.1 CROSS SILL SUB ASM	AA13D-65-140		1			W/LONG CARGO

NO	PART NAME	PART NUMBER	ALL	TRK	VAN	COH	NOTE
		AA100-65-140A		1			
36	NO.3 CROSS SILL SUB ASM	AA13D-65-150		1			W/LONG CARGO
		AA100-65-150A		1			
37	NO.4 CROSS SILL SUB ASM	AA100-65-160A		1			
38	NO.5 CROSS SILL SUB ASM	AA13D-65-160		2			W/LONG CARGO
39	BOLT	AA101-65-843A		2			DLX,SDX
40	CHAIN ASM	AA101-65-840A		2			DLX,SDX
41	PROTECTOR	AA101-65-842		2			DLX,SDX
42	OUTER FUEL COVER	AA13B-65-212A		1			LPG
43	CHAIN HANGER LH	AA101-65-830		1			DLX,SDX
	CHAIN HANGER RH	AA101-65-835		1			DLX,SDX

6610A WIRING HARNESS

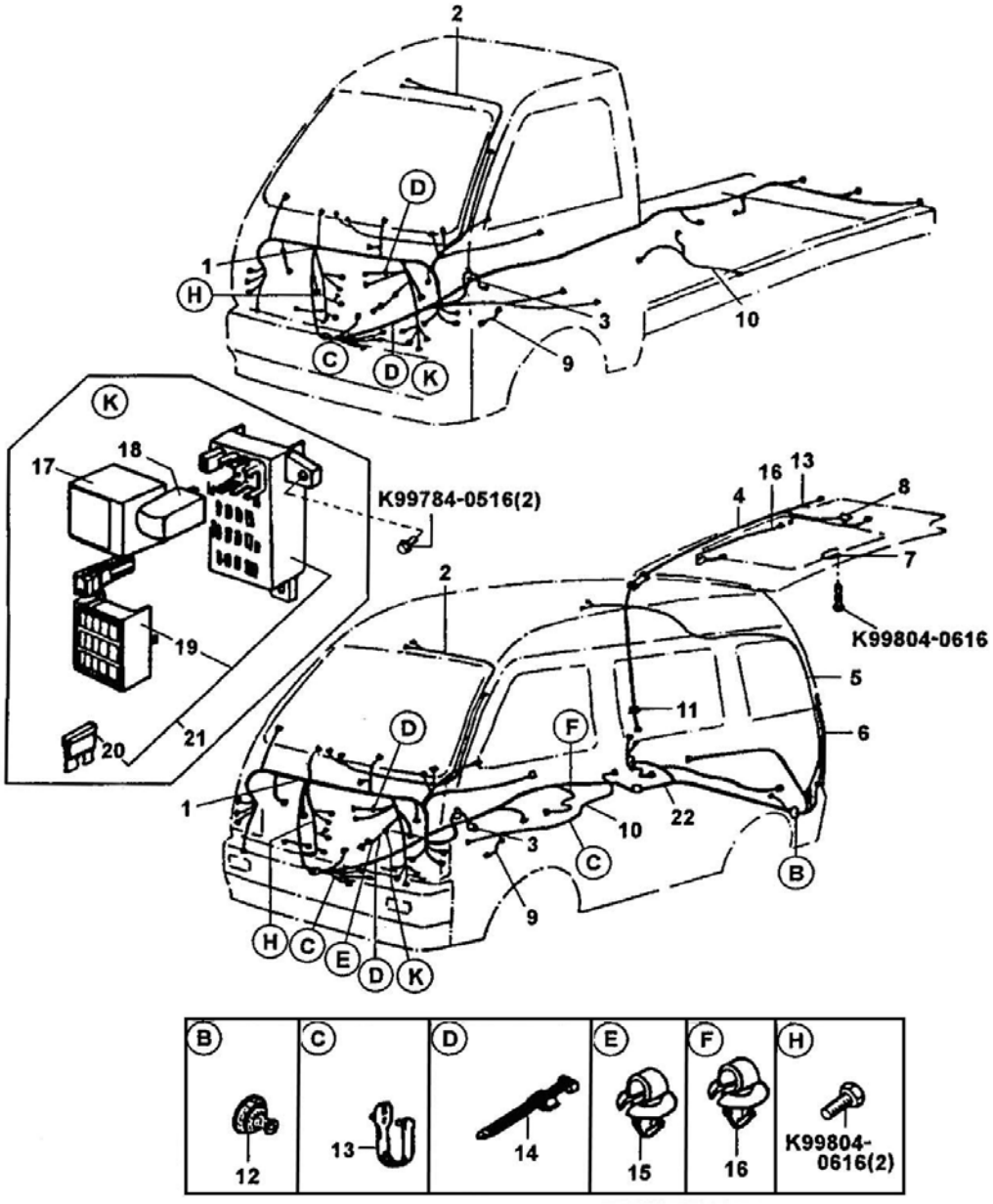

6610A WIRING HARNESS

NO	PART NAME	PART NUMBER	ALL	TRK	VAN	COH	NOTE
1	FRONT HARNESS	AA100-67-010G		1			
		AW100-67-010F		1			
		AW104-67-010F		1			LONG CARGO
		AA16A-67-010P		1			LPG
		AW111-67-010F			1	1	DLX,SDX VAN: SDX
		AW113-67-010E			1	1	7P:STD, VAN:DLX
		AA13D-67-010T		1			LPG, LONG CARGO
		AA161-67-010N			1	1	LPG
		AA134-67-010 P12				1	CASH BOX
		AA103-67-010X		1			EXP:STD
		AA106-67-010D		1			LONG CARGO EXP:STD
		AA114-67-010X			1	1	COH: DLX,SDX MULTI, EXP:SDX VAN: SDX
		AA117-67-010P			1	1	COH: STD,VAN DLX
		AAWA3-67-010K		1			ONLY LEAD OPT
		AAW-06-67-010D		1			LONG CARGO OPT
		AAW14-67-010D			1	1	COH: DLX,VAN SDX
		AAWB4-67-010J			1	1	ONLY LEADED: OPT: COH: DLX,SDX

NO	PART NAME	PART NUMBER	ALL	TRK	VAN	COH	NOTE
		AAWB7-67-010J			1	1	LEADED ONLY, OPT: COH, STD VAN:DLX
2	ROOF WIRE	AA100-67-005C	1				
3	FRONT DOOR WIRE LH	AA100-67-190C	1				
		AA101-67-190E	1				POWER WIND. OPT,SDX 5COH: DLX
	FROTN DOOR WIRE RH	AA100-67-200C	1				
		AA101-67-200E	1				POWER WIND. OPT,SDX 5COH: DLX
4	BACK DOOR HARNESS	AA110-67-050G			1		
		AA112-67-050E				1	STD
		AA113-67-050C				1	DLX,SDX
		AA113-67-050 P12				1	CASH BOX
5	REAR DOME LAMP HARNESS	AA150-67-006D			1	1	
6	DEFOGGER HARNESS	AA113-67-061A				1	DLX,SDX MULTI
7	DEFOGGER EARTH HARNESS	AA113-67-067A				1	DLX,SDX MULTI
8	PROTECTOR	MG001-67-061		1	2	2	
					4	4	OPT
9	ENGINE EARTH CABLE	AA113-67-067A	1				
10	POSITIVE BATTERY CABLE	AA13A-67-250 (AA100-67-250A)	1				
		AA110-67-250B			1	1	
		AA110-67-250C P12				1	CASH BOX

NO	PART NAME	PART NUMBER	ALL	TRK	VAN	COH	NOTE
12	GROMMET	AA110-67-038			3	3	
13	CLAMP	K99279-1303		1	6	6	
						2	CASH BOX
		AA110-67-035		1	5	5	
						2	CASH BOX
14	CLAMP	KW029-67-051	2				
15	CABLE CLIP	AA823-05-006	1				
16	CABLE CLIP	AA823-05-008				1	
17	WIPER RELAY	AA100-67-820	1				STD:DLX
		AA101-67-820A	1				
18	FLASHER UNIT	AA100-66-820	1				
19	FUSE COVER	AA100-67-733J	1				
		AA100-67-733D P01	1				EXP
		AW100-67-733A	1				MPI
20	FUSE (15A)	K99705-1112	4				
	FUSE (20A)	K99705-1120	5				
	FUSE (30A)	K99705-1130	3				
21	FUSE BLOCK	AA100-66-730F	1				
22	FRAM HARNESS	AA110-67-004J			1	1	VAN, COH: STD:EXP VAN, COH: STD,DLX
		AA112-67-004C				1	STD
		AA113-67-004G				1	7COH: DLX, 5COH
		AA113-67-004E P12				1	CASH BOX
		AA114-67-004G				1	7COH: SDX

6610B ENGINE WIRING HARNESS

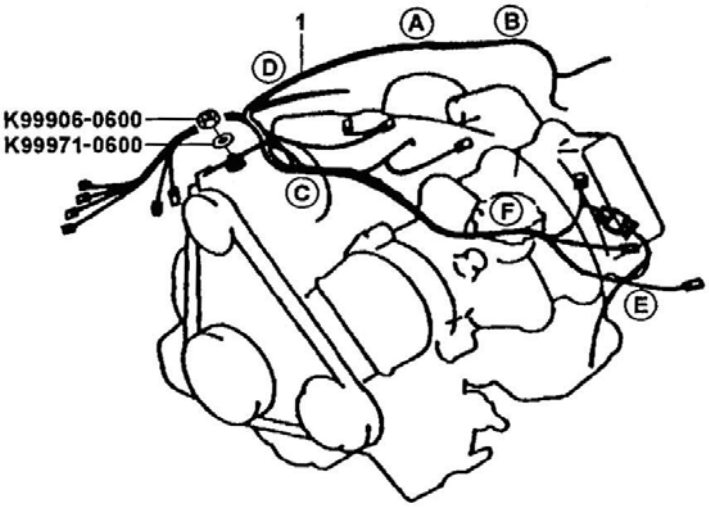

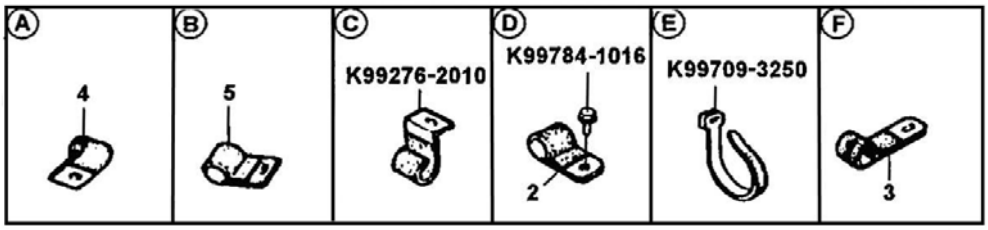

6610B ENGINE WIRING HARNESS

NO	PART NAME	PART NUMBER	ALL	TRK	VAN	COH	NOTE
1	ENGINE WIRING HARNESS	AA100-67-070J		1			
		AA16A-67-070H		1			LPG
		AA100-67-070J P01		1			EXP
		AA110-67-070K			1	1	
		AA161-67-070F			1	1	LPG
		AA131-67-070 P12				1	CASH BOX
		AA110-67-070K P01			1	1	EXP
2	CLIP	A9679-16116A	1				
		K99276-2010	1				LPG
3	CLIP	AA100-67-073	1				
4	CLIP	K99276-1208		1			
		0S083-67-074			1	1	
5	CLIP	AA100-17-648	1				

6610B.1 ENGINE WIRING HARNESS (MPI)

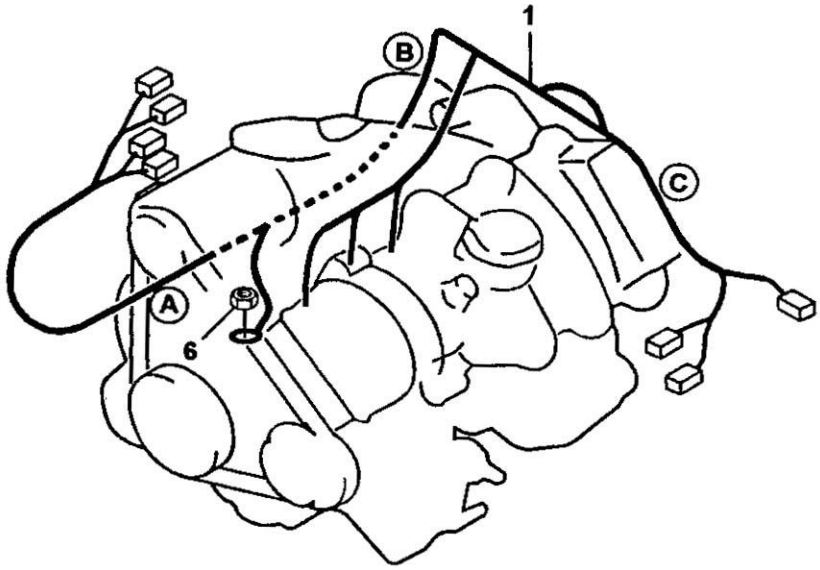

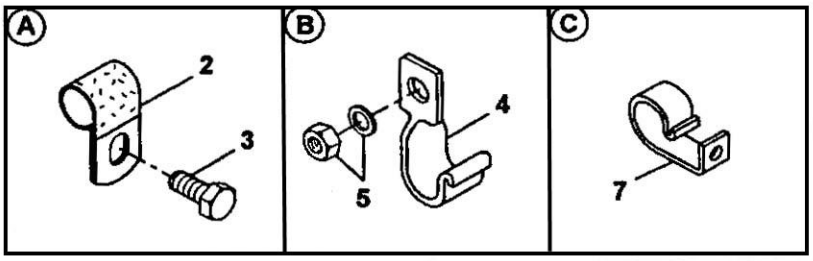

6610B.1 ENGINE WIRING HARNESS (MPI)

NO	PART NAME	PART NUMBER	ALL	TRK	VAN	COH	NOTE
1	ENGINE WIRING HARNESS	AW100-67-070C		1			
		AW111-67-070C			1	1	
2	CLIP	A9679-16116A	1				
3	BOLT	MPN01-16-313	1				
4	CLIP	OS083-67-073	1				
5	WASHER	K99952-0822	1				
6	NUT	K90906-0611	1				
7	CLIP	K99276-1608	1				

6610C BATTERY & CARRIER

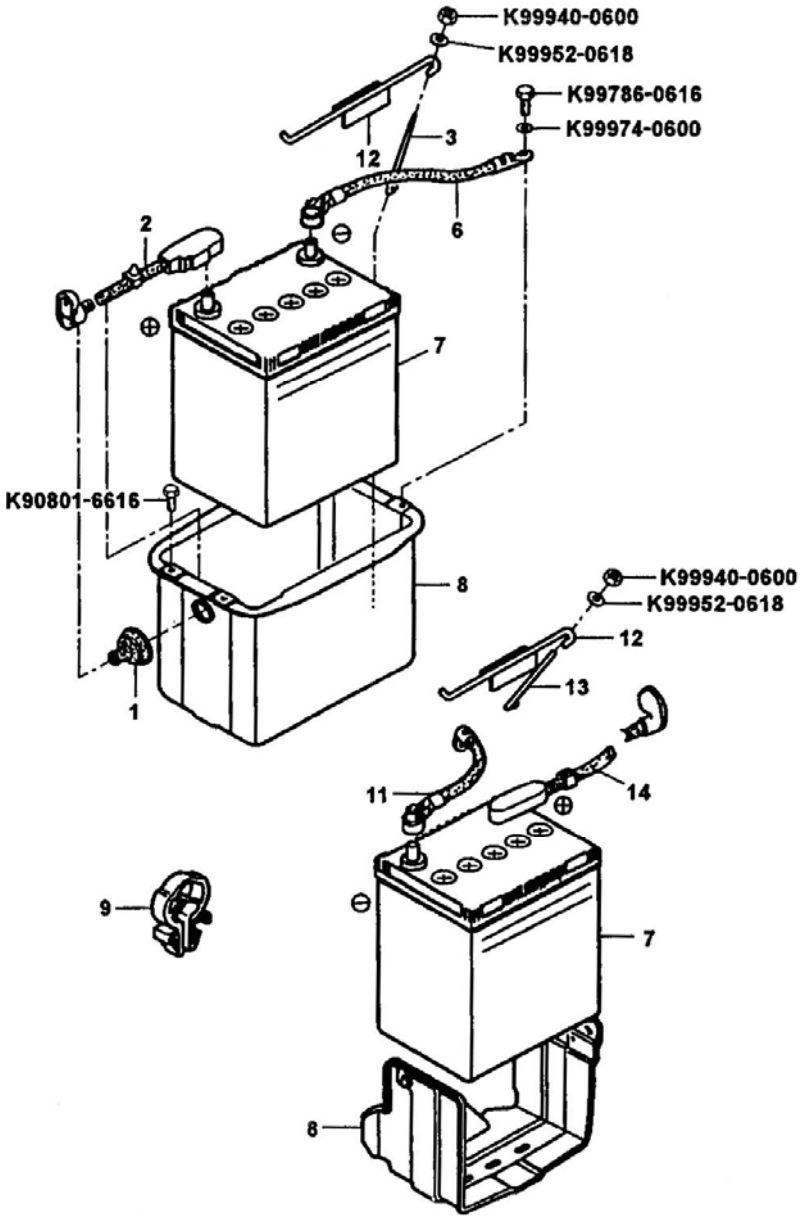

6610C BATTERY & CARRIER

NO	PART NAME	PART NUMBER	ALL	TRK	VAN	COH	NOTE
1	GROMMET	AA110-67-043			1	1	
2	POSITIVE BATTERY CABLE	AA110-67-250B			1	1	
		AA114-67-250 P12				1	CASH BOX
3	BATTERY CLAMP	AA113-67-042			1	1	
6	NEGATIVE BATTERY CABLE	AA110-67-260			1	1	
		AA146-67-260			1	1	LPG
7	BATTERY	AA100-18-520	1				GROBAL & YUASA
		AA131-18-520			1	1	LPG
		AAW00-18-520	1				EXP: GROBAL & YUASA
		AA102-18-520	1				KOREA STORAGE
		AAW02-18-520	1				EXP: KOREA STORAGE
		AA143-18-50 P12				1	CASH BOX
8	BATTERY CARRIER SUB ASM	AA110-56-011			1	1	
		AA100-54-481B		1			
9	CLAMP	AA100-67-044		2			
11	NEGATIVE BATTERY CABLE	AA100-67-260A		1			
12	BATTERY CLAMP HOLDER	AA100-67-140	1				
13	BATTERY CLAMP	AA100-56-110		1			
14	POSITIVE BATTERY CABLE	AA13A-67-250		1			
		AA110-67-250B			1	1	
		AA110-67-250C P12				1	CASH BOX
		AA146-67-250			1	1	LPG

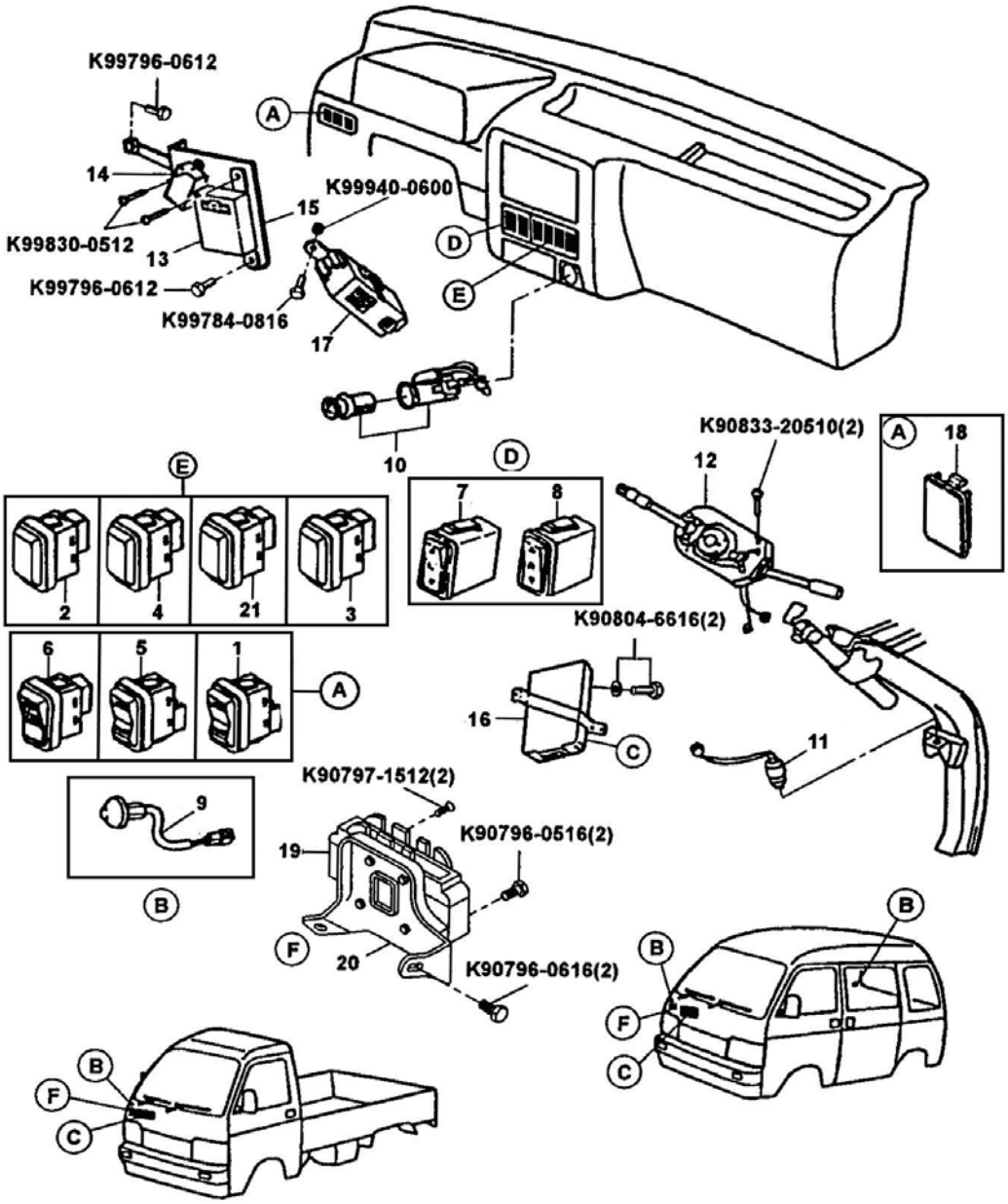
K99796-0612
A
14
K99940-0600
15
K99830-0512
13
D
K99796-0612
E
K99784-0816
17
10
K90833-20510(2)
A
18
E
D
12
7
8
2
4
21
3
K90804-6616(2)
6
5
1
A
16
C
11
K90797-1512(2)
9
19
K90796-0516(2)
B
B
F
20
K90796-0616(2)
B
B
F
C
F
C

6620A SWITCH & RELAY

NO	PART NAME	PART NUMBER	ALL	TRK	VAN	COH	NOTE
1	REAR HEATER SWITCH	AA113-66-340C			1	1	
2	FOG LAMP SWITCH	OK72B-66-480	1				SDX
3	REAR DEFOGGER WITCH	OK72B-66-460				1	DLX,SDX
4	REAR WINDSHIELD WASHER SWITCH	OK72C-67-540				1	DLX,SDX
5	BACK DOOR SWITCH	AA114-66-390C			1	1	DLX,SDX
6	LPG SWITCH	AA13A-66-220A	1				LPG
7	POWER WINDOW SWITCH LH	AA100-66-270	1				OPT
8	POWER WINDOW SWITCH RH	AA100-66-280	1				OPT
9	COURTESY LAMP SWITCH	AA100-66-540C		2	3	3	BLACK
		AA110-66-540B			2	2	NATURAL SIDE
		OK931-66-250A	1				DLX,SDX
10	CIGAR LIGHTER	OK931-66-250A	1				
11	STOP LAMP SWITCH	AA100-66-490A	1				
12	COMBINATION SWITCH	AA100-66-120B	1				
13	FUEL PUMP RELAY	AA100-18-821A	1				
14	DOOR TIMER LOCK & RELAY	AA70A-67-830	1				
15	BRACKET	AA100-67-711B	1				
16	ECU	AA100-18-880	1				EMIS. CONT. GAS ONLY
17	WIPER INTERMEDITATE RELAY	AA100-67-820A	1				STD,DLX
		AA101-67-820A	1				SDX
18	SWITCH HOLE COVER	OK72C-55-225				1	5COH: SDX,LPG: SDX
					2	2	OPT:SDX
					3	3	COH: DLX, SDX

NO	PART NAME	PART NUMBER	ALL	TRK	VAN	COH	NOTE
						4	LPG: 5VAN DLX

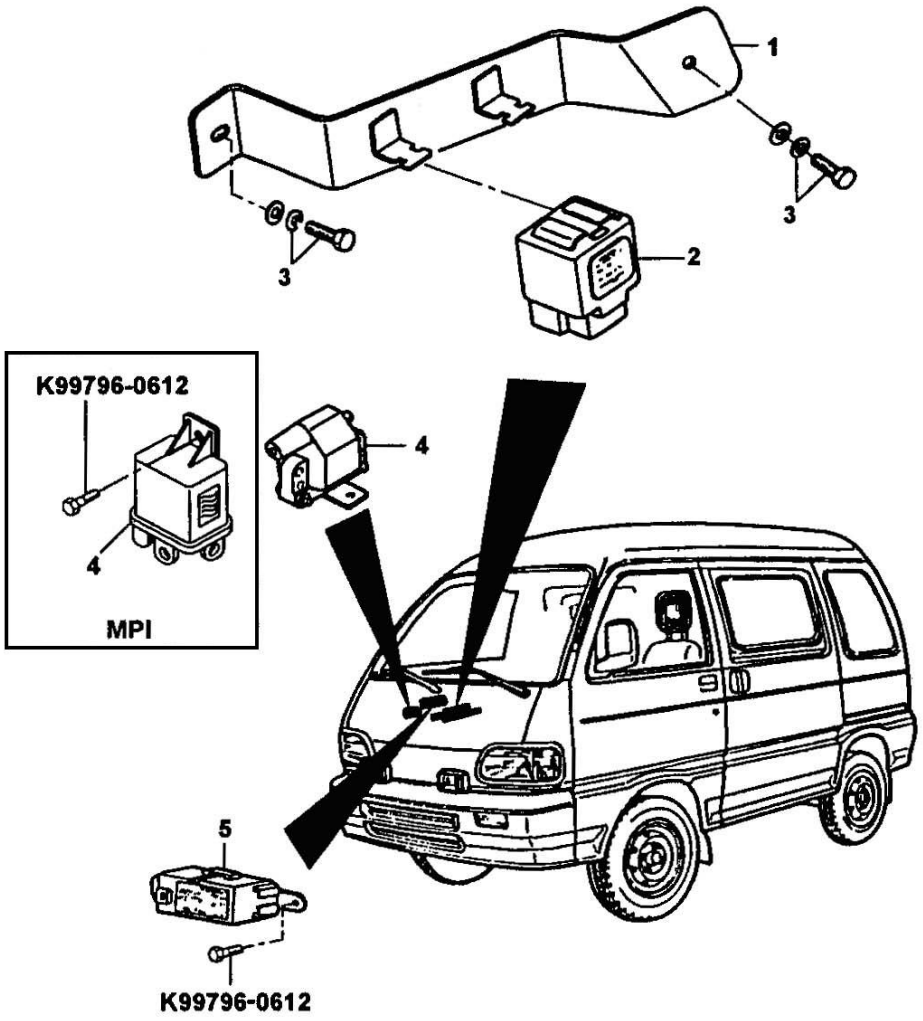
1
2
3
3
K99796-0612
4
MPI
4
5
K99796-0612

6620B RELAY

NO	PART NAME	PART NUMBER	ALL	TRK	VAN	COH	NOTE
1	BRACKET RELAY	AA13A-67-741	1				LPG
2	LPG RELAY	OK99E-67-740	2				LPG
3	BOLT & WASHER	K90804-6616	2				LPG
4	IGNITION COIL	AA100-18-100	1				
5	WATER LEVEL UNIT	AA100-15-620A			1	1	
6	MAIN RELAY	OK901-18-811	1				MPI

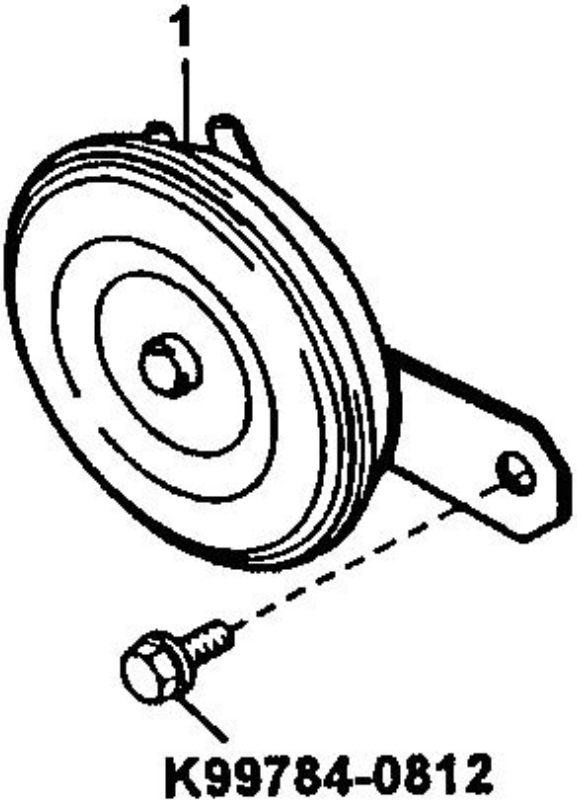
1
K99784-0812

6620C HORN

NO	PART NAME	PART NUMBER	ALL	TRK	VAN	COH	NOTE
1	HORN	AA100-66-770B	1				
		AA101-66-770	1				KIWON

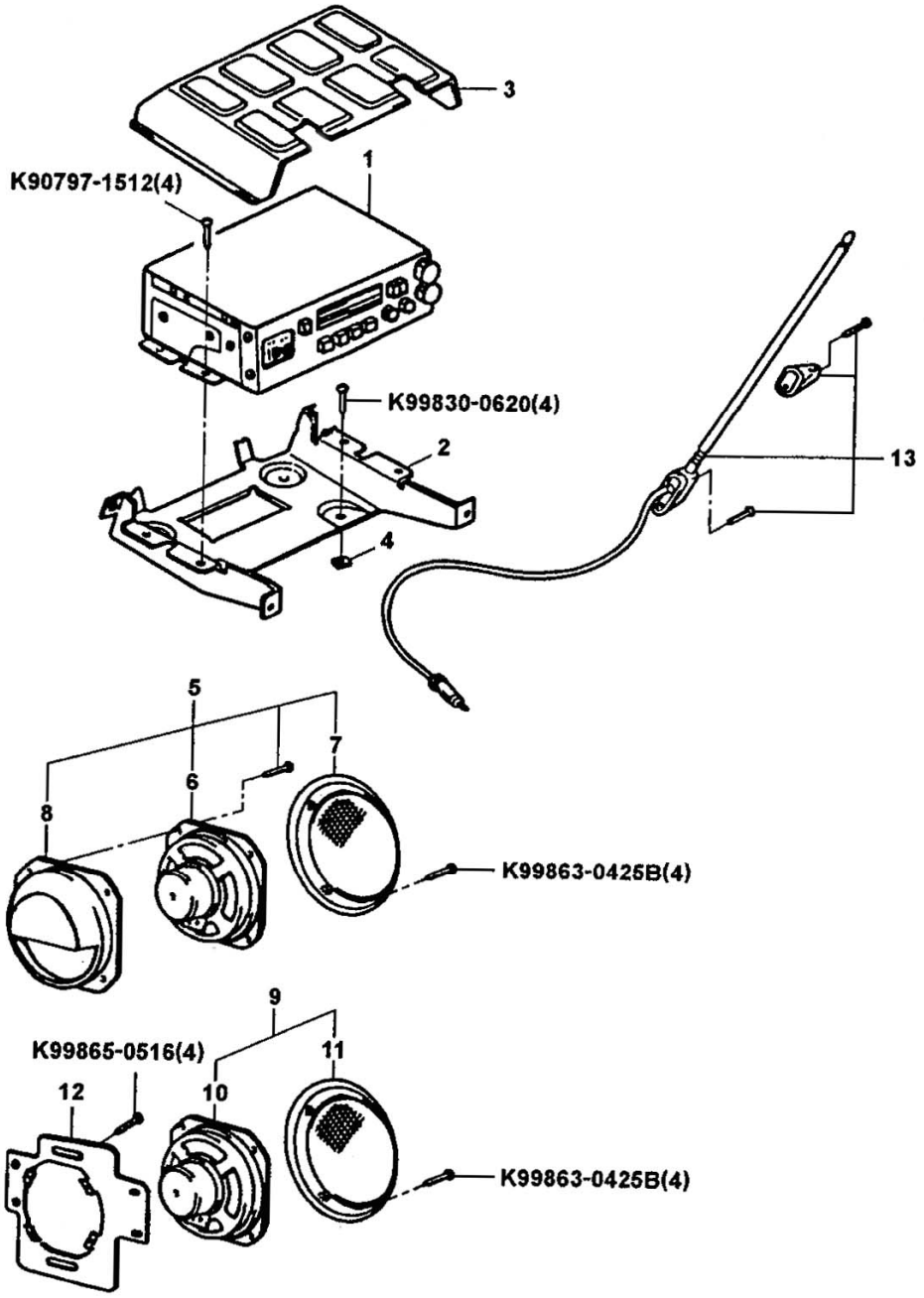
3
1
K90797-1512(4)
K99830-0620(4)
2
13
4
5
7
6
8
K99863-0425B(4)
9
K99865-0516(4)
11
12
10
K99863-0425B(4)

NO	PART NAME	PART NUMBER	ALL	TRK	VAN	COH	NOTE
1	RADIO (M.T.R.)	AA100-66-900C		1		1	KESCO, STD
		AA101-66-900C		1		1	SEPUNG, STD
	RADIO (E.T.R.)	AA110-66-900C	1				KESCO COH: DLX,5P, VAN: DLX, SDX
		AA111-66-900C	1				SEPUNG COH: DLX,5P, VAN: DLX, SDX
		AA120-66-900B				1	KESCO, SDX
		AA121-66-900B				1	SEPUNG, SDX
2	RADIO BRACKET	AA100-66-901B	1				
3	ROADIO COVER	AA100-66-902	1				
4	NUT	AA100-60-408	4				
5	FRONT SPEAKER ASM	AA100-66-920	2				
						1	STD
6	FRONT SPEAKER	AA100-66-921	2				
7	FRONT SPEAKER GRILLE	AA100-66-922	2				
8	SPEAKER COVER	AA100-66-923	2				
9	REAR SPEAKER ASM	AA114-66-940				2	SDX
10	REAR SPEAKER	AA114-66-941B				2	SDX
11	REAR SPEAKER GRILLE	AA100-66-922				2	SDX
12	REAR SPEAKER BRACKET RH	AA114-66-943				1	SDX
	REAR SPEAKER BRACKET LH	AA114-66-944				1	SDX
13	ANTENNA	AA100-66-960E (AA101-66-960)	1				

6640A WINDSHIELD WIPER & WASHER

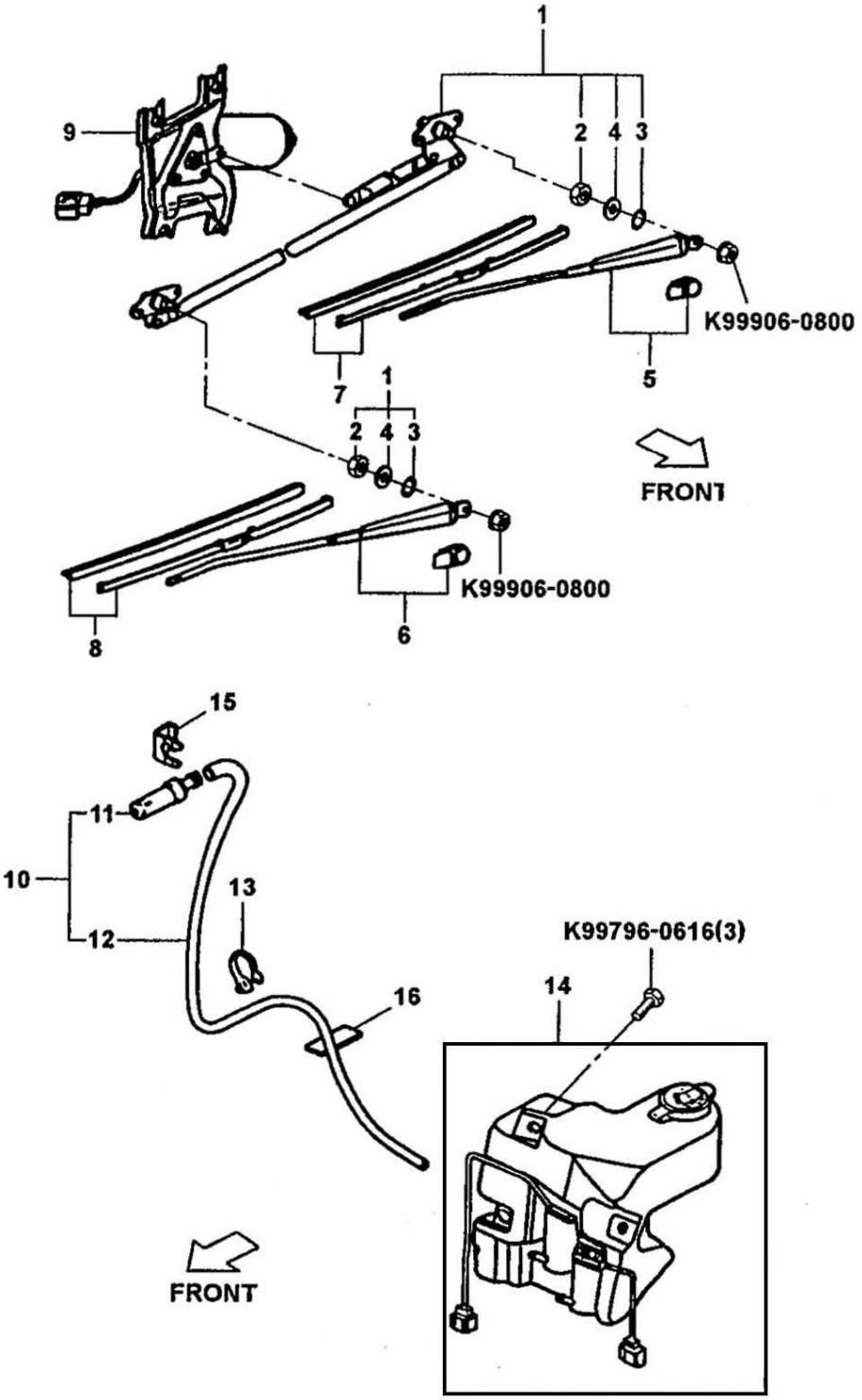

6640A WINDSHIELD WIPER & WASHER

NO	PART NAME	PART NUMBER	ALL	TRK	VAN	COH	NOTE
1	WINDSHIELD WIPER LINK ASM	AA100-67-360	1				
2	WASHER PACKING	AA100-85-365	2				
3	NUT	AA100-85-367	2				
4	WASHER	AA100-85-366	2				
5	WIPER ARM LH	AA100-67-311A	1				HONG SUNG
		AA101-67-311A	1				DONG YANG
6	WIPER ARM RH	AA100-67-321A	1				HONG SUNG
		AA101-67-321A	1				DONG YANG
7	WIPER BLADE LH	AA100-67-330A	1				HONG SUNG
		AA101-67-330A	1				DONG YANG
8	WIPER BLADE RH	AA100-67-340A	1				HONG SUNG
		AA101-67-340A	1				DONG YANG
9	WIPER MOTOR (FRONT)	AA100-67-345	1				POONG SUNG
		AA101-67-345	1				MANDO
10	WINDSHIELD WASHER NOZZLE ASM	AA111-67-510A	1				
11	WASHER NOZZLE	AA100-67-525A	1				
12	WASHER NOZZLE HOSE	AA111-67-501	1				
13	CLAMP	AA100-67-506	2				
14	WINSHIELD WASHER TANK ASM	AA100-67-480	1				GEENAM COH:STD
		AA101-67-480	1				POONG SUNG COH:STD
		AA114-67-480				1	GEENAM DLX,SDX
		AA115-67-480				1	POONG SUNG DLX,SDX

NO	PART NAME	PART NUMBER	ALL	TRK	VAN	COH	NOTE
15	WASHER NOZZLE HOLDER	AA100-67-521	1				
16	PROTECTOR	MG001-67-061	1				

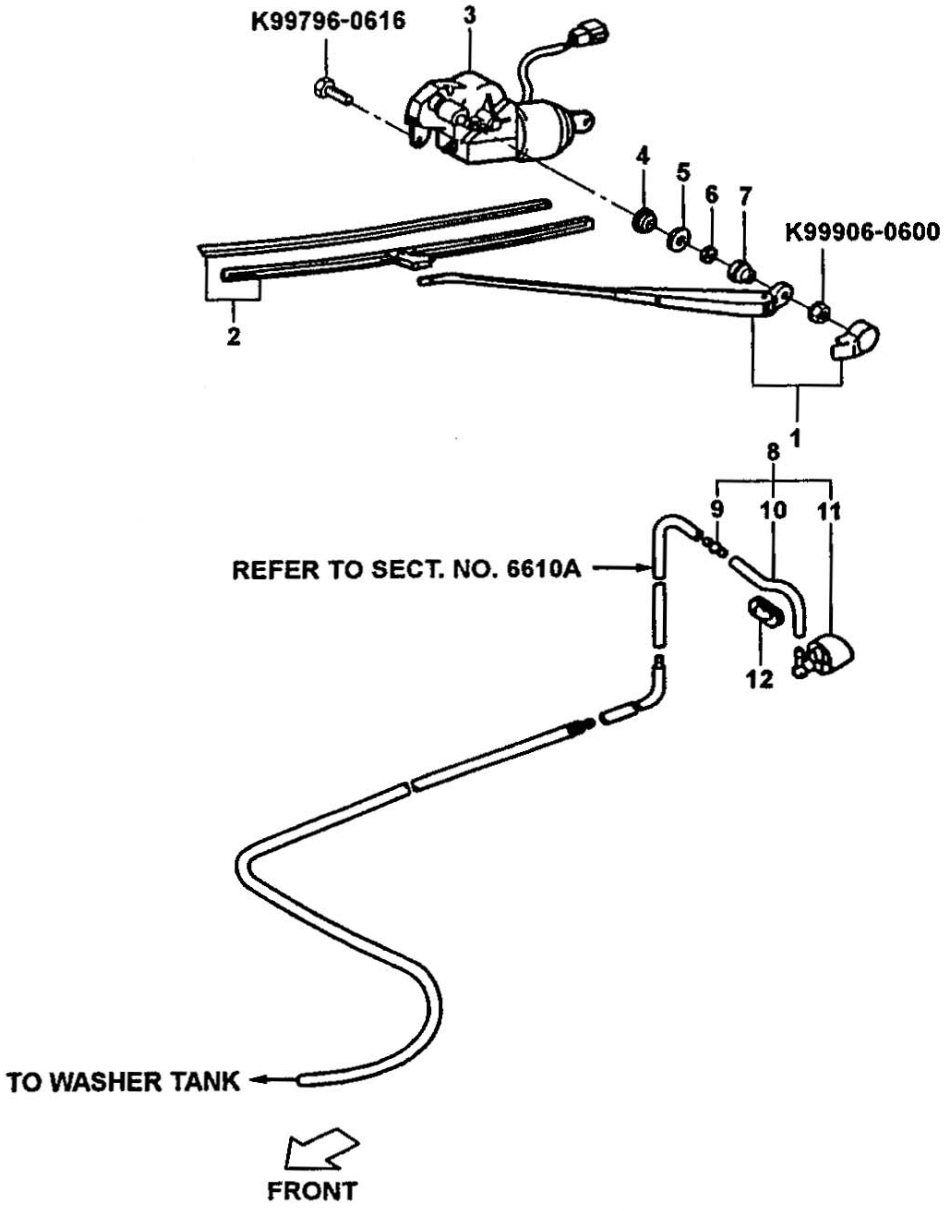
K99796-0616
3
4
5
6
7
K99906-0600
2
1
8
9
10
11
REFER TO SECT. NO. 6610A
12
TO WASHER TANK
FRONT

6640B REAR WINDOW WIPER

NO	PART NAME	PART NUMBER	ALL	TRK	VAN	COH	NOTE
1	REAR WIPER ARM	AA114-67-421A				1	DLX,SDX EXP:SDX
2	REAR WIPER BLADE	AA114-67-330A				1	DLX,SDX EXP:SDX
3	REAR WIPER MOTOR	AA114-67-450				1	POONG SUNG, DLX,SDX
4	GASKET	AA114-67-456				1	DLX,SDX EXP:SDX
5	WASHER	AA114-67-455				1	DLX,SDX EXP:SDX
6	NUT	AA114-67-454				1	DLX,SDX EXP:SDX
7	CAP SHIELD	AA114-67-456				1	DLX,SDX EXP:SDX
8	REAR WASHER NOZZLE ASM	AA114-67-510				1	DLX,SDX EXP:SDX
9	REAR WASHER HOSE JOINT	AA114-57-502				1	DLX,SDX EXP:SDX
10	WASHER NOZZLE HOSE	AA114-67-501				1	DLX,SDX EXP:SDX
11	REAR WASHER NOZZLE	AA114-67-525				1	DLX,SDX EXP:SDX
12	GROMMENT	AA114-67-506				1	DLX,SDX EXP:SDX

6650 SPECIAL ELECTRIC (CASH BOX)

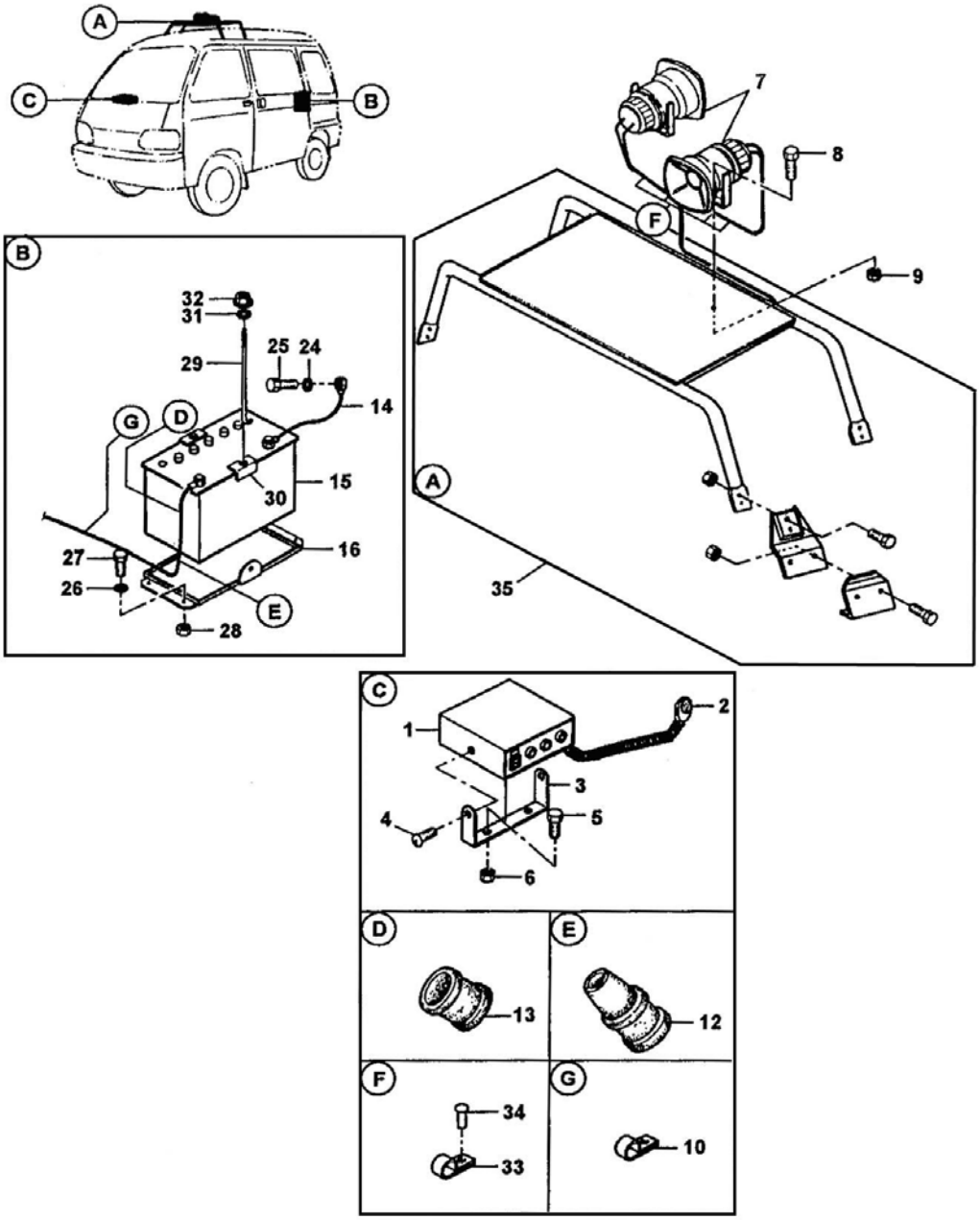

6650 SPECIAL ELECTRIC (CASH BOX)

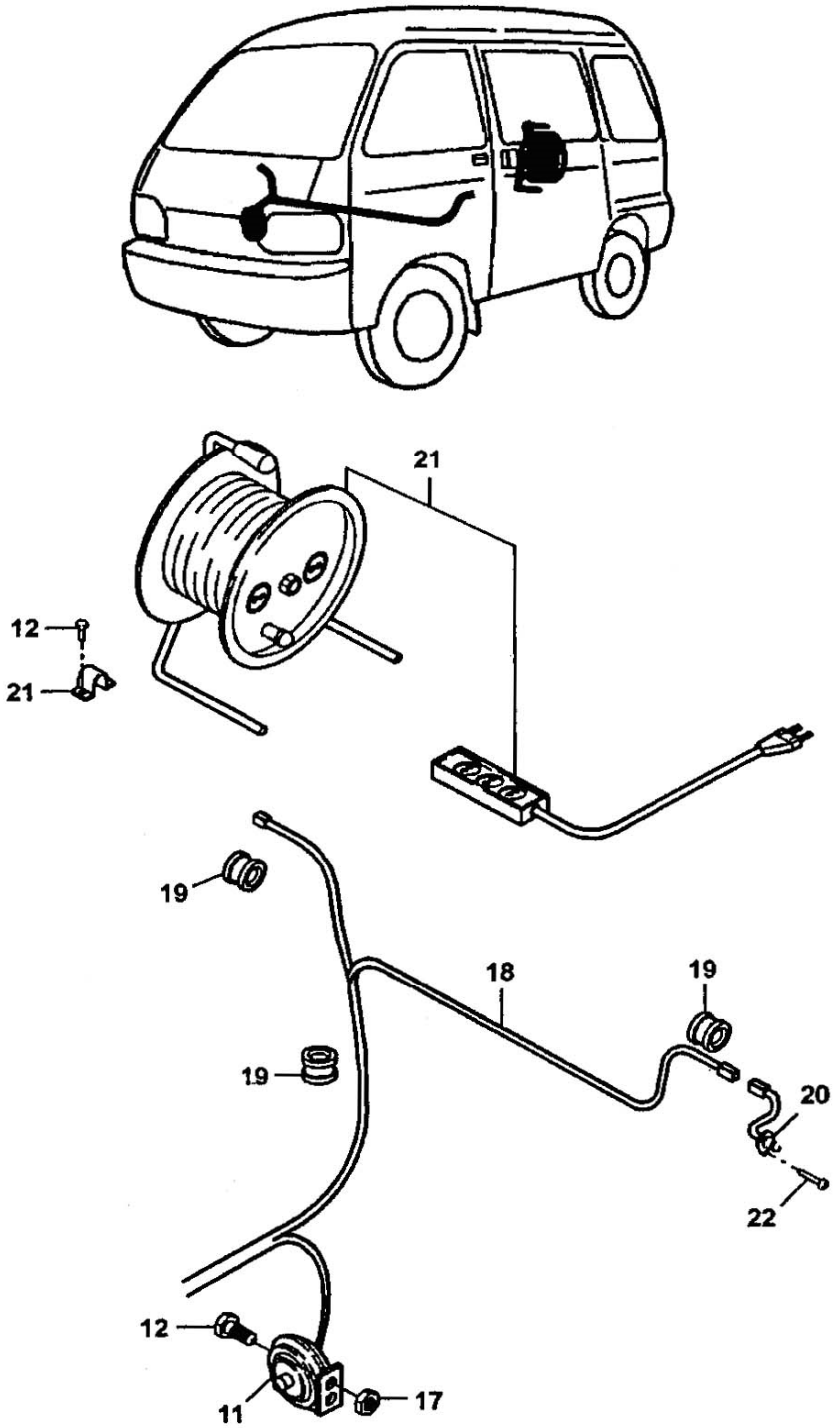

6650 SPECIAL ELECTRIC (CASH BOX)

NO	PART NAME	PART NUMBER	ALL	TRK	VAN	COH	NOTE
1	AMPLIFER ASM	AA144-66-060 P12				1	
2	MIC ASM	AA144-66-070 P12				1	
3	MIC HOLDER	AA144-66-071 P12				1	
4	SCREW	K99836-0312B				2	
5	BOLT	K99784-0520				2	
6	NUT	K99940-0500				2	
7	SPEAKER	AA144-67-940 P12				2	
8	BOLT	K99784-0620				4	
9	NUT	K99784-0600				4	
10	CLIP	K99709-3250				10	
11	BURGLAR ALARM	AA144-66-310 P12				1	
12	BOLT	K99804-0516				10	
13	GROMMET	AA110-67-043				1	
14	BATTERY CABLE	AA144-67-260 P12				1	
15	BATTERY	AA144-18-520 P12				1	
16	BATTERY CARRIER	AA144-67-710 P12				1	
17	NUT	K99940-0500				10	
18	WIRING HARNESS	AA114-66-320 P12				1	
19	GROMMET	AA114-66-321 P12				4	
20	DOOR SWITCH	KKY01-66-540				2	
21	DRUM CABLE ASM	AA114-66-3X1 P12				1	
22	SCREW	K99836-0512				2	
24	WASHER	K99974-0600				1	
25	BOLT	K99786-0616				1	
26	WASHER	K99952-0816				4	OPT
27	BOLT	K99784-0800				4	OPT
28	NUT	K99784-0800				4	OPT
29	CLAMP BOLT	AA143-67-790 P12				1	OPT

6650 SPECIAL ELECTRIC (CASH BOX)

NO	PART NAME	PART NUMBER	ALL	TRK	VAN	COH	NOTE
30	COVER ASM	AA143-67-800 P12				1	OPT
31	WASHER	K99952-0818				2	OPT
32	FLANGE NUT	K99940-0800				2	OPT
33	CLIP	K99276-1006				4	
34	RIVET	K90257-2403				4	
35	ROOF RACK ASM	AA143-69-090 P12				1	

6800 TOP CEILING

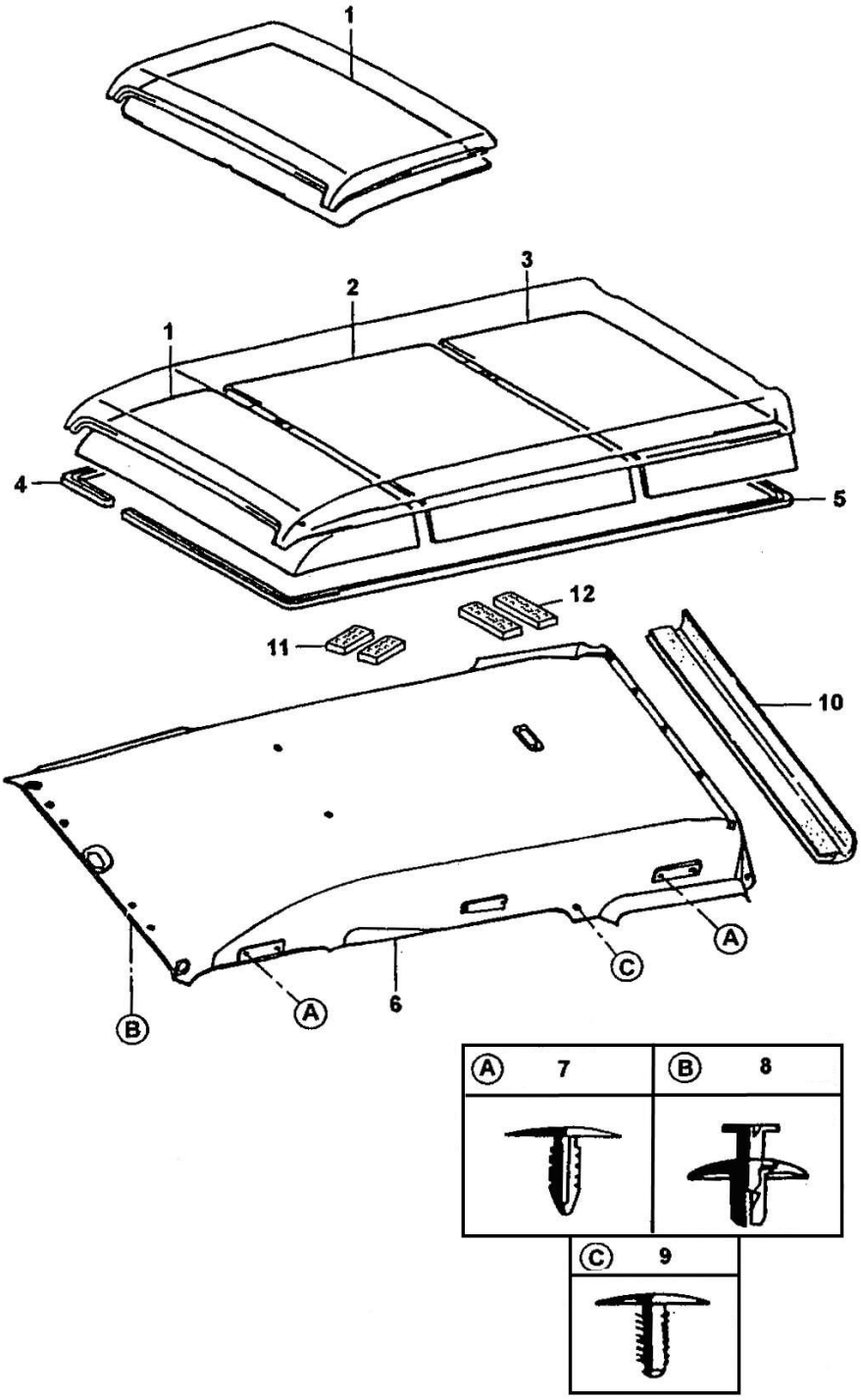

6800 TOP CEILING

NO	PART NAME	PART NUMBER	ALL	TRK	VAN	COH	NOTE
1	FRONT TOP CEILING	AA114-68-031E			1	1	
		A101-68-031D		1			
2	CENTER TOP CEILING	AA114-68-032D			1	1	
3	REAR TOP CEILING	AA114-68-033D			1	1	
4	SEAMING WELT NO.1	AA110-68-041			1	1	
5	SEAMING WELT NO.2	AA110-68-042			1	1	
6	TOP CEILING ASM	AA114-68-141D				1	OPT: DLX,SDX
7	FASTENER	AA114-68-147A				4	OPT: DLX,SDX
8	FASTENER	AA114-68-146A				4	OPT: DLX,SDX
9	FASTENER	AA114-68-151				11	OPT: DLX,SDX
10	END MOULDING	AA114-68-149				1	OPT: DLX,SDX
11	PAD	AA114-68-148C				2	OPT: DLX,SDX
12	PAD	AA117-68-148				4	OPT: DLX,SDX

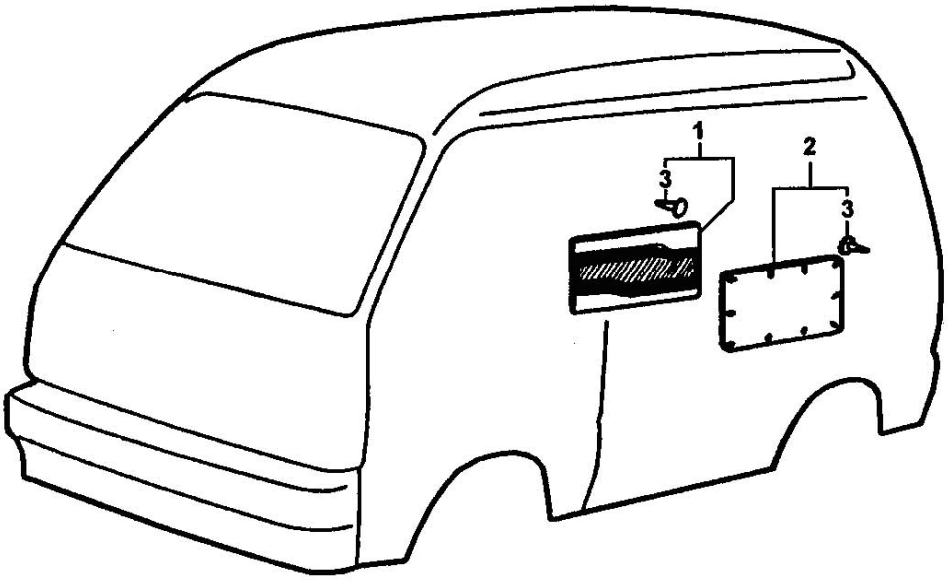
1
2
3
3

6800B INSIDE TRIM

NO	PART NAME	PART NUMBER	ALL	TRK	VAN	COH	NOTE
1	REAR SIDE TRIM ASM RH	AA111-68-710A			1		
		AA112-68-710				1	STD
		AA114-68-710A				1	DLX
		AA115-68-710B				1	SDX
2	REAR SIDE TRIM ASM LH	AA111-68-730A			1		
		AA112-68-730				1	STD
		AA112-68-730A				1	DLX
		AA114-68-730B				1	SDX
3	FASTENER	AA100-68-401			10	10	

FLOOR MATS & PADS

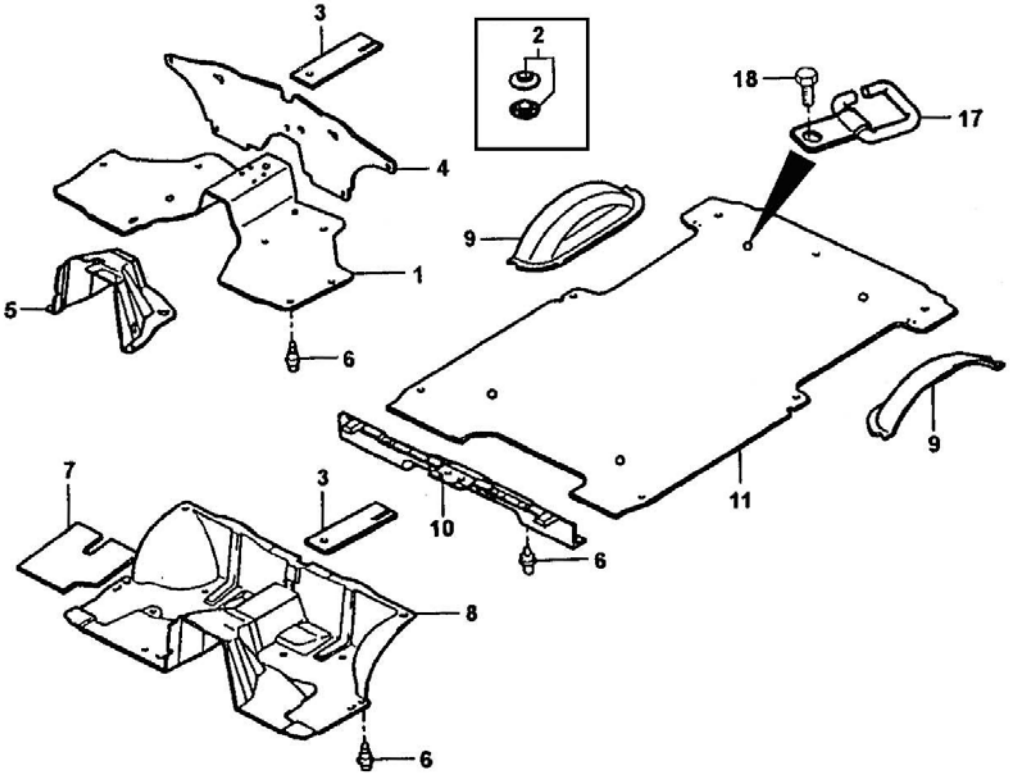

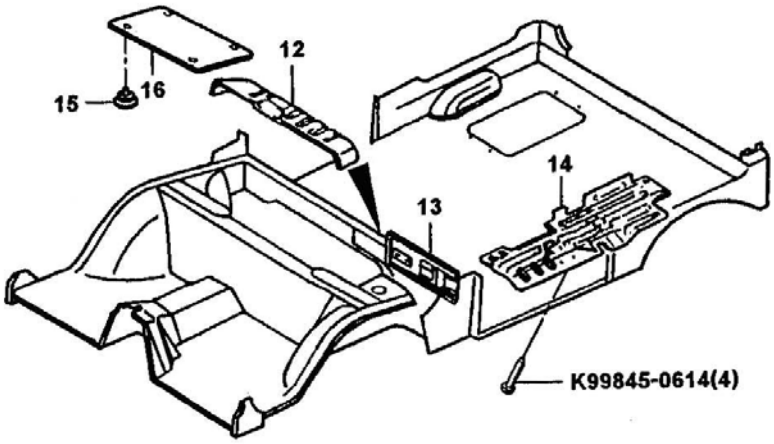

6800C FLOOR MATS & PADS

NO	PART NAME	PART NUMBER	ALL	TRK	VAN	COH	NOTE
1	FRONT FLOOR MAT	AA100-68-660B		1			
		AA100-68-670A		1			OPT: STD
		AA101-68-660A		1			DLX,SDX
		AA110-68-660B			1	1	COH: STD,5P DLX VAN:DLX
2	PILE FASTENER	AA100-68-865			4	4	DLX,SDX
		AA100-68-865		6			STD: 9EA
		AA100-68-865			9	9	COH: STD
3	SEAT RISER PAD	AA100-56-219	1				
4	FRONT FLOOR MAT SET	AA110-68-680B			1	1	COH: STD VAN:DLX
		AA111-68-680[a]			1	1	COH: STD (OPT), VAN (OPT) DLX
5	FRONT FLOOR MAT SET	AA110-68-650B			1	1	VAN:DLX COH: STD, 5P DLX
6	FASTENER HOOK	AA100-68-678		7	8	8	COH: STD, 5VAN DLX
7	FLOOR MAT COVER	AA114-68-663 (DISCONTINUED)			2	2	CHO: DLX,SDX
8	FRONT FLOOR MAT SET	AA114-68-660D				1	DLX,SDX
		AA115-68-660E				1	DLX,SDX OPT
9	REAR WHEEL HOUSE MAT SET	AA112-68-677A			2	2	COH: STD,5P, DLX 5VAN: DLX

NO	PART NAME	PART NUMBER	ALL	TRK	VAN	COH	NOTE
		AA114-68-677			2	2	COH: SDX,DLX 5VAN: SDX
10		AA112-68-690C			1	1	COH: STD,5P, DLX 5VAN: DLX
		AA114-68-690B			1	1	COH: SDX,DLX 5VAN: SDX
11	REAR FLOOR MAT SET NO.2	AA112-68-670K				1	STD Opt EXP:STD
		AA123-68-670B			1	1	5CHOH: SDX, 5VAN: SDX
		AA123-68-670 P12				1	CASH BOX
		AA114-68-670K				1	7COH: DLX,SDX
		AA114-68-670J J12				1	EXP:DLX SDX
		AA117-68-670F			1	1	5VAN: DLX, 5COH: DLX
		AAW13-68-670A				1	OPT:EXP DLX,SDX
		AA175-68-670B				1	MULTI
12	ENGINE COVER INSULATOR	AA110-56-471			1	1	
13	HEADER INSULATOR	AA110-56-461			1	1	
14	REAR FLOOR HEAT UPPER INSULATOR	AA110-56-015			1	1	
15	HOLE PLUG	AA100-56-478		1			
16	ENGINE COVER INSULATOR	AA100-56-477		1			
17	LUGGAGE CARRIER HOLDER AMS	AA111-68-690			4		2VAN

6800C FLOOR MATS & PADS

NO	PART NAME	PART NUMBER	ALL	TRK	VAN	COH	NOTE
16	BOLT	K99796-0810B			4		2VAN

6910A SUNVISORS & ASSIST HANDLES

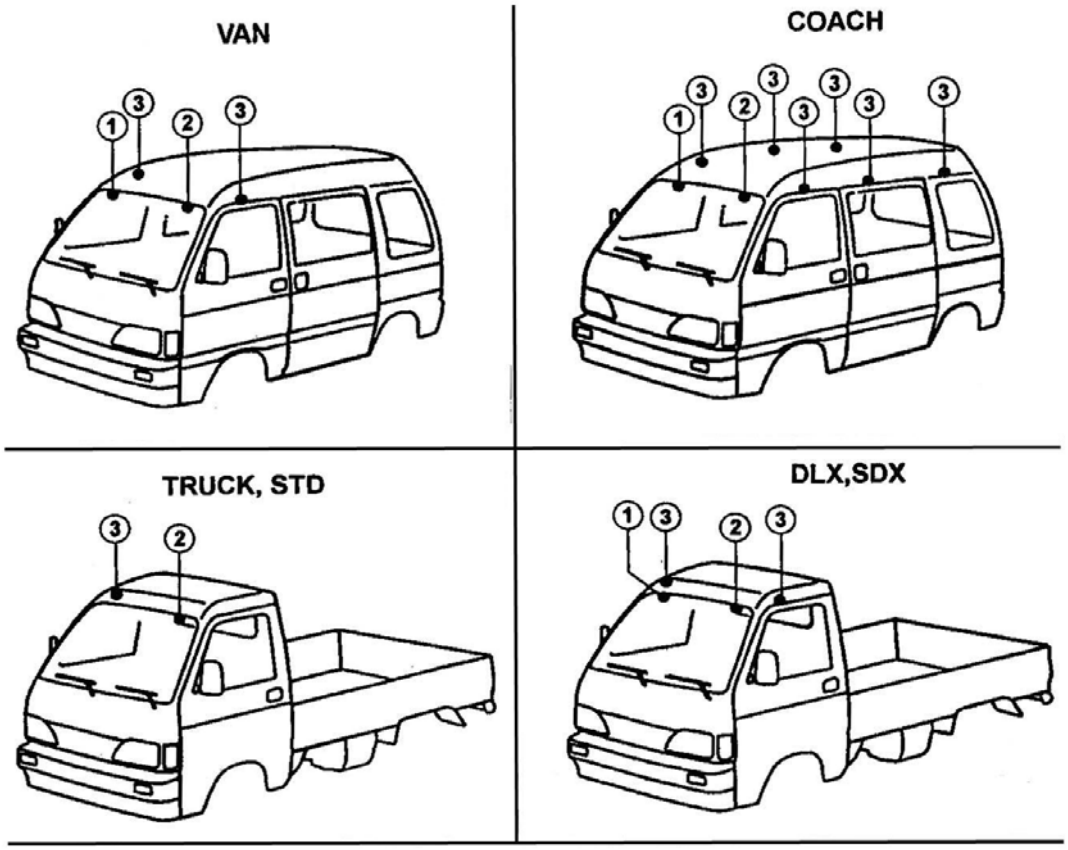

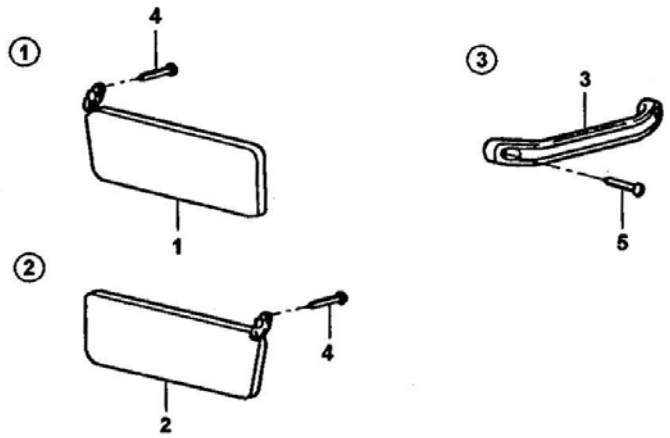

6910A SUNVISORS & ASSIST HANDLES

NO	PART NAME	PART NUMBER	ALL	TRK	VAN	COH	NOTE
1	SUNVISOR ASM RH	AA114-69-270D	1				
2	SUNVISOR ASM LH	AA114-69-320E (AA114-69-320F)	1				
3	HANDLE ASSIT	AA100-69-470		1			
					3		5VAN
					1		2VAN
					5		DLX,SDX
4	SCREW	AA100-69-321		2		2	STD
			4				DLX,SDX
5	SCREW	K90838-6620B			2		2VAN
					6		5VAN
						6	5VAN
						10	DLX,SDX

6910B PARTITION PANEL

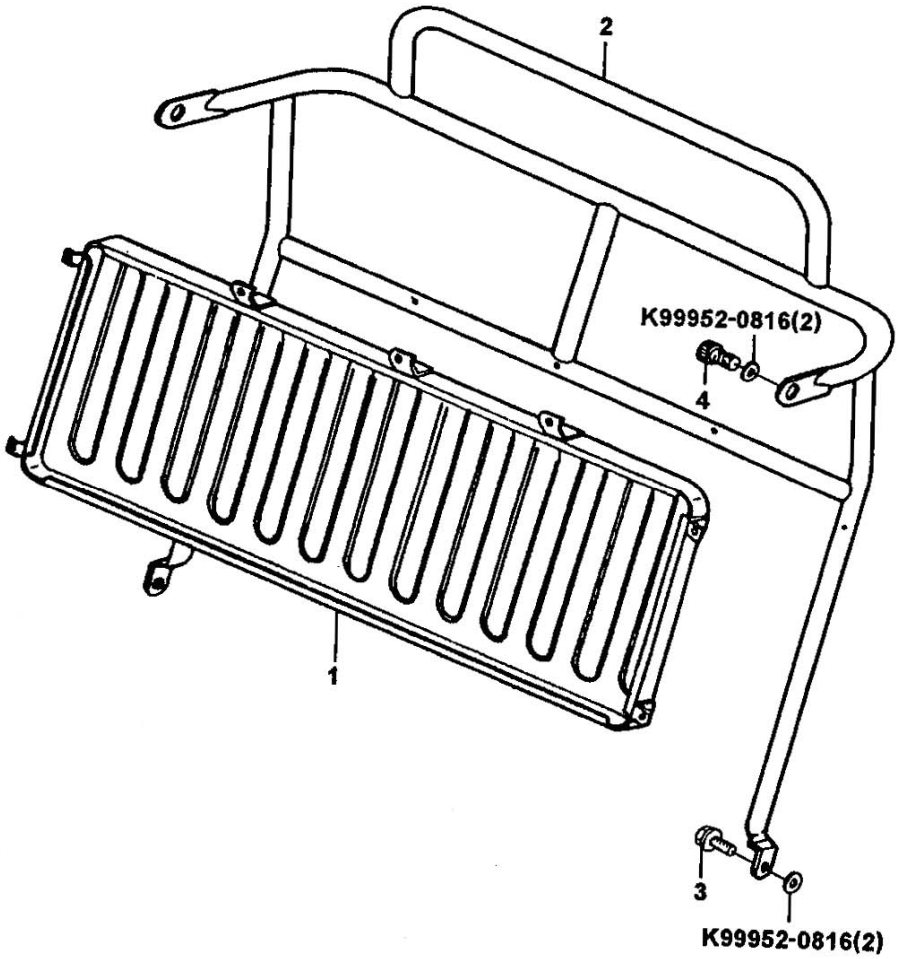

6910B PARTITION PANEL

NO	PART NAME	PART NUMBER	ALL	TRK	VAN	COH	NOTE
1	PANEL ASM	AA110-69-621B			1		
2	PIPE ASM	AA110-69-624C			1		2VAN
		AA117-69-624B			1		5VAN
3	BOLT	AA110-69-625A			2		5VAN: 4EA
4	BOLT	K99771-7814B			2		2VAN

6920 CAUTION PLATES & LABELS

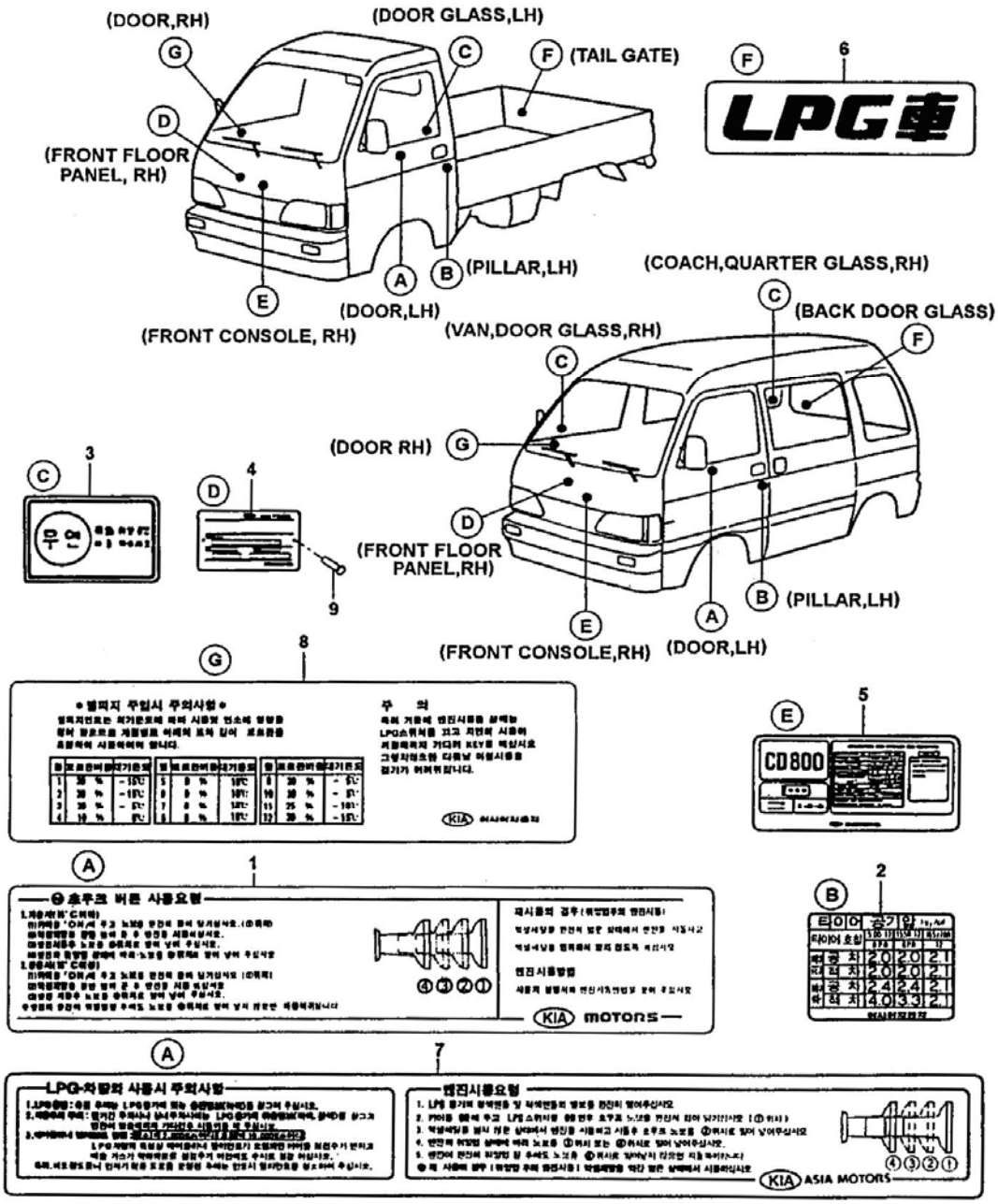

6920 CAUTION PLATES & LABELS

NO	PART NAME	PART NUMBER	ALL	TRK	VAN	COH	NOTE
1	ENGINE STARTING CAUTION PLATE	AA101-41-439	1				
		AA100-41-439C PO1	1				EXP
2	TIRE PRESSURE CAUTION PLATE	AA100-37-014B	1				
		AA100-37-014A PO1					EXP
3	UNLEAD LABEL	AA100-42-990A PO1	1				OPT:EXP
		AA101-42-990 PO2	1				EXP:STD
4	MODEL PLATE	AA100-69-011B	1				
		AA100-69-011A PO1	1				EXP
		AA35A-69-011C JO6	1				OPT:EXP
5	ENGINE CAUTION PLATE	AA100-10-021D	1				
		AA16A-10-021B	1				LPG
		AA100-10-021 PO2	1				EXP
6	LPG LABEL	AA13A-42-436B		1			LPG
		AA131-42-436A			1	1	LPG
7	CAUTION LABLE	AA16A-13-959	1				LPG
8	FUEL LABLE	AA13A-13-957A	1				LPG
9	RIVET	K90257-3206	2				

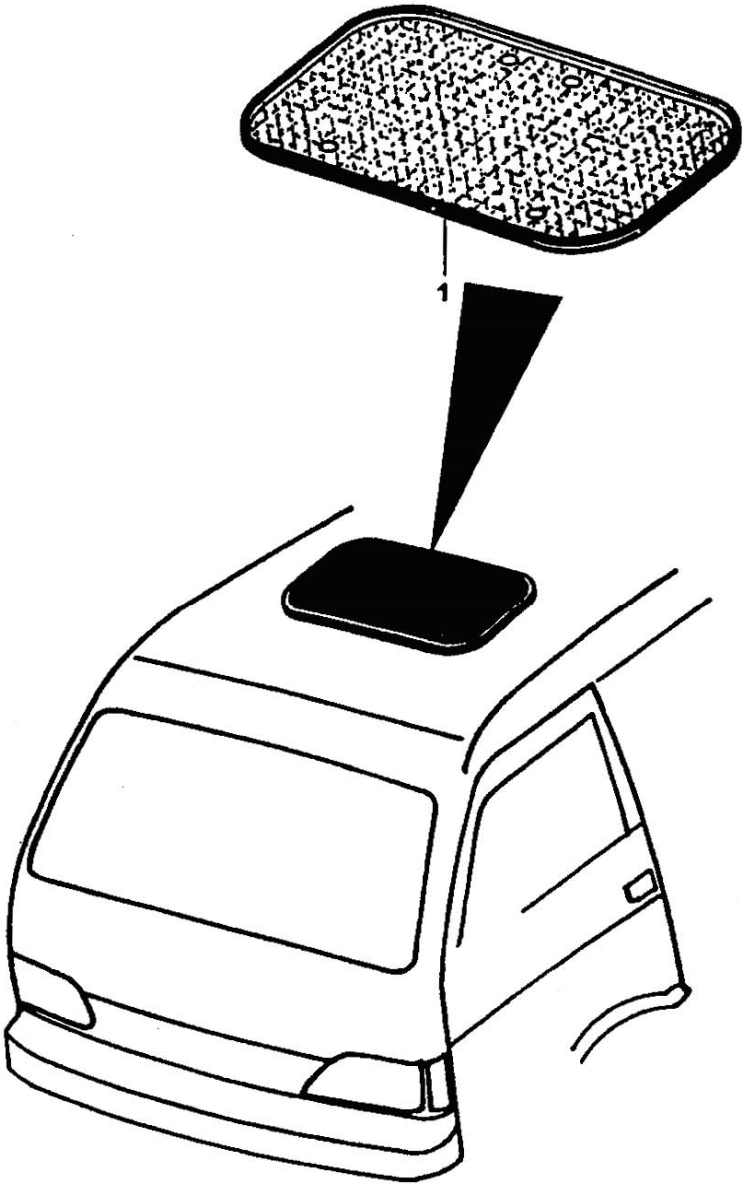
1

6930 SUN ROOF

NO	PART NAME	PART NUMBER	ALL	TRK	VAN	COH	NOTE
1	SUN ROOF ASM	AA113-69-800B			1	1	OPT: DLX,SDX

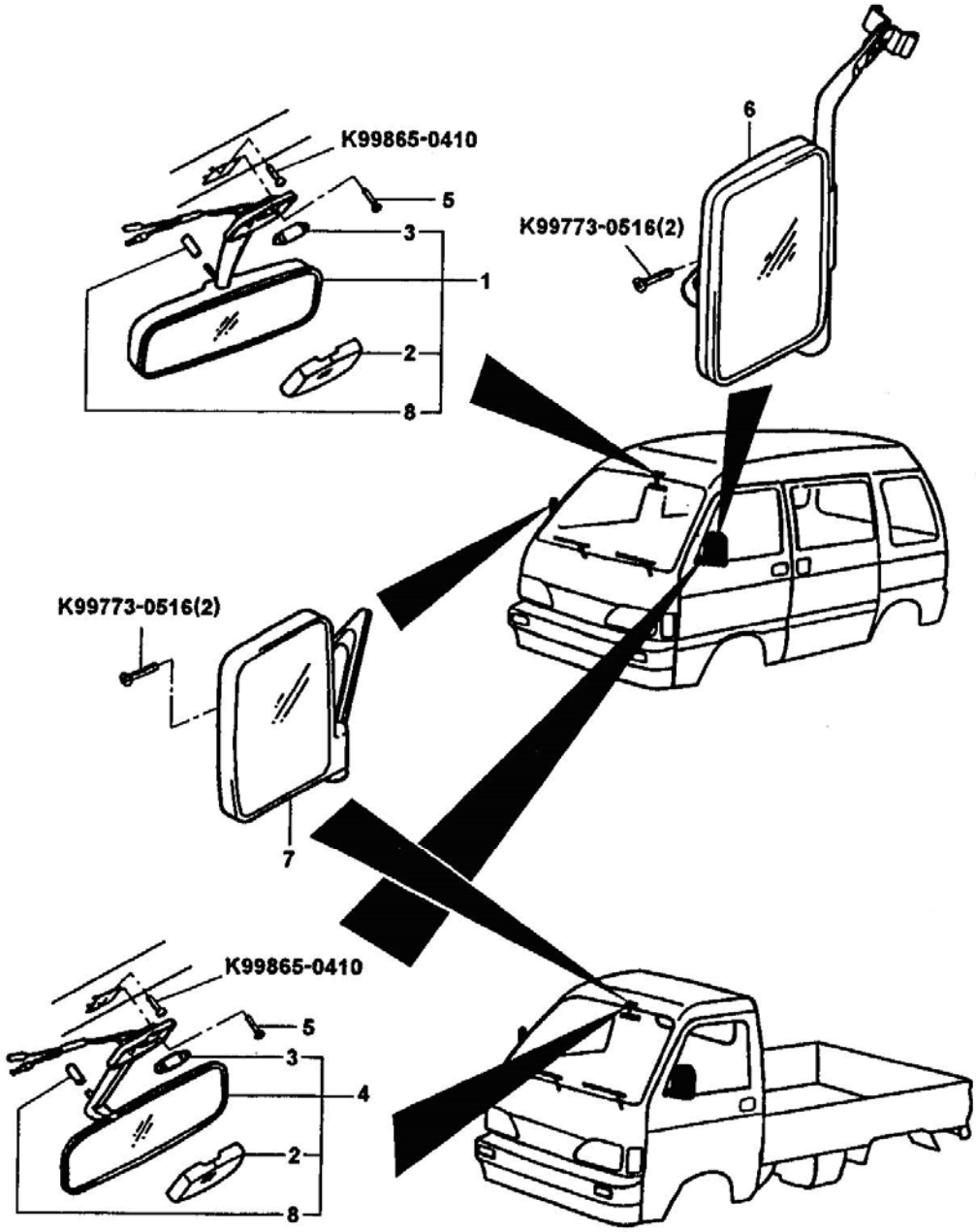
K99865-0410
5
3
1
2
8
6
K99773-0516(2)
K99773-0516(2)
7
K99865-0410
5
3
4
2
8

6940 MIRRORS

NO	PART NAME	PART NUMBER	ALL	TRK	VAN	COH	NOTE
1	REAR VIEW MIRROR (INNER)	AA114-69-220B	1				SDX
2	LENS	AA100-69-223	1				
3	BULB	AA100-69-222	1				
4	REAR VIEW MIRROR (INNER)	AA100-69-220A	1				DOM: STD,DLX EXP
5	SCREW	AA100-69-178	2				
6	OUTDSIDE MIRROR LH	AA114-69-110D (AA114-69-110AS-1)	1				SDX
	OUTDSIDE MIRROR RH	AA114-69-170D	1				SDX
7	OUTDSIDE MIRROR LH	AA100-69-110B AA100-69-110AS	1				W/O SDX
		AAW10-69-110B	1				EXP
		AW12-69-110	1				MIDDLE EAST ONLY
	OUTDSIDE MIRROR RH	AA100-69-170B AA100-69-170AS	1				W/O SDX
		AAW10-69-170	1				EXP
		AW12-69-170	1				MIDDLE EAST ONLY
8	STOPPER	AA100-69-224	1				STD:DLX
		AA114-69-224	1				SDX

7200 REAR DOOR (BODY & TRIM)

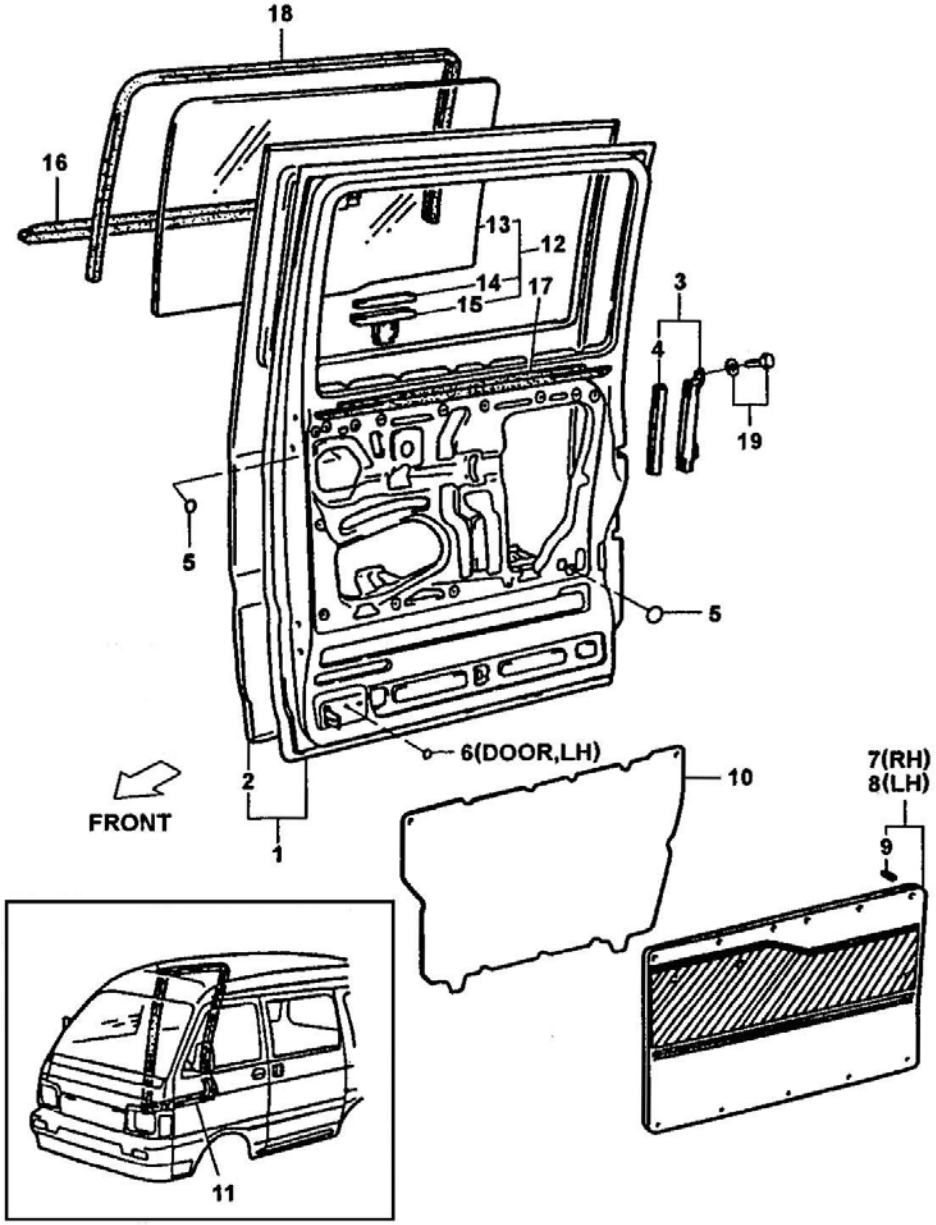

7200 REAR DOOR (BODY & TRIM)

NO	PART NAME	PART NUMBER	ALL	TRK	VAN	COH	NOTE
1	REAR SLIDING DOOR PANEL RH	AA110-72-020A			1		2VAN
		AA112-72-020A			1	1	W/O 2VAN
		AA115-72-020A			1		GLASS 2VAN
		AA143-72-020 P12				1	CASH BOX
	REAR SLIDING DOOR PANEL LH	AA110-72-520A			1		2VAN
		AA112-72-520A			1	1	W/O 2VAN
		AA115-72-520A			1		GLASS 2VAN
		AA143-72-520 P12				1	CASH BOX
2	REAR SLIDING DOOR PANEL SKIN RH	AA110-72-021A			1		2VAN
		AA112-72-021A			1	1	W/O 2VAN
		AA115-72-021A					GLASS 2VAN
	REAR SLIDING DOOR PANEL SKIN LH	AA110-72-521A			1		2VAN
		AA112-72-521A			1	1	W/O 2VAN
		AA115-72-521A			1		GLASS 2VAN
3	WINDOW FRAME SUB ASM RH	AA112-73-250			1	1	W/O 2VAN
	WINDOW FRAME SUB ASM LH	AA112-73-750			1	1	W/O 2VAN
4	REAR DOOR LOWER RUN	AA112-72-721			2	2	
5	HOLE COVER	AA110-62-863			6	6	
6	HOLE COVER DOOR LH	AA110-56-247			2	2	
7	SLIDING DOOR TRIM ASM RH	AA111-68-520B			1		2VAN
		AA115-68-520A				1	DLX

NO	PART NAME	PART NUMBER	ALL	TRK	VAN	COH	NOTE
		AA113-68-520A			1	1	COH: STD, 5VAN: DLX
		AA114-68-520C			1	1	7COH: SDX, 5COH, 5VAN: SDX
	SLIDING DOOR TRIM ASM LH	AA111-68-510B			1		2VAN
		AA115-68-510A				1	DLX
		AA113-68-520A			1	1	COH: STD, 5VAN: DLX
		AA114-68-510C			1	1	7COH: SDX, 5COH, 5VAN: SDX
9	FASTENER	AA112-68-865[a]			13	13	
10	REAR DOOR SCREEN	AA112-72-861			2	2	5VAN
11	REAR DOOR WEATHERSTRIP RH	AA110-72-762			1	1	5VAN
	REAR DOOR WEATHERSTRIP LH	AA110-72-761			1	1	5VAN
12	SLIDING DOOR WINDOW GLASS RH	AA112-72-510			1	1	5VAN
		AA114-72-510			1	1	OPT: 5VAN
	SLIDING DOOR WINDOW GLASS LH	AA112-73-510			1	1	5VAN
		AA114-73-510			1	1	OPT: 5VAN
13	GLASS RH	AA112-72-501			1	1	5VAN
		AA114-72-501			1	1	OPT: 5VAN
	GLASS LH	AA112-73-501			1	1	5VAN
		AA114-73-501			1	1	OPT: 5VAN

7200 REAR DOOR (BODY & TRIM)

NO	PART NAME	PART NUMBER	ALL	TRK	VAN	COH	NOTE
14	SLIDING DOOR GLASS WEATHERSTRIP	AA112-72-505			2	2	5VAN
15	SLIDING DOOR GLASS CHANNEL	AA112-72-870			2	2	5VAN
16	SLIDING DOOR GALSS WEATHERSTRIP RH	AA112-72-785			1	1	OUTER 5VAN
	SLIDING DOOR GALSS WEATHERSTRIP LH	AA112-72-775			1	1	OUTER 5VAN
17	SLIDING DOOR GLASS WEATHERSTRIP RH	AA112-72-780			1	1	INNER 5VAN
	SLIDING DOOR GLASS WEATHERSTRIP LH	AA112-72-770			1	1	INNER 5VAN
18	SLIDING DOOR GLASS RUN LH	AA112-72-581			1	1	5VAN
	SLIDING DOOR GLASS RUN RH	AA112-72-575			1	1	5VAN
19	BOLT & WASHER	AA100-56-889			2	2	5VAN

7230A REAR DOOR WINDOW REGULATOR

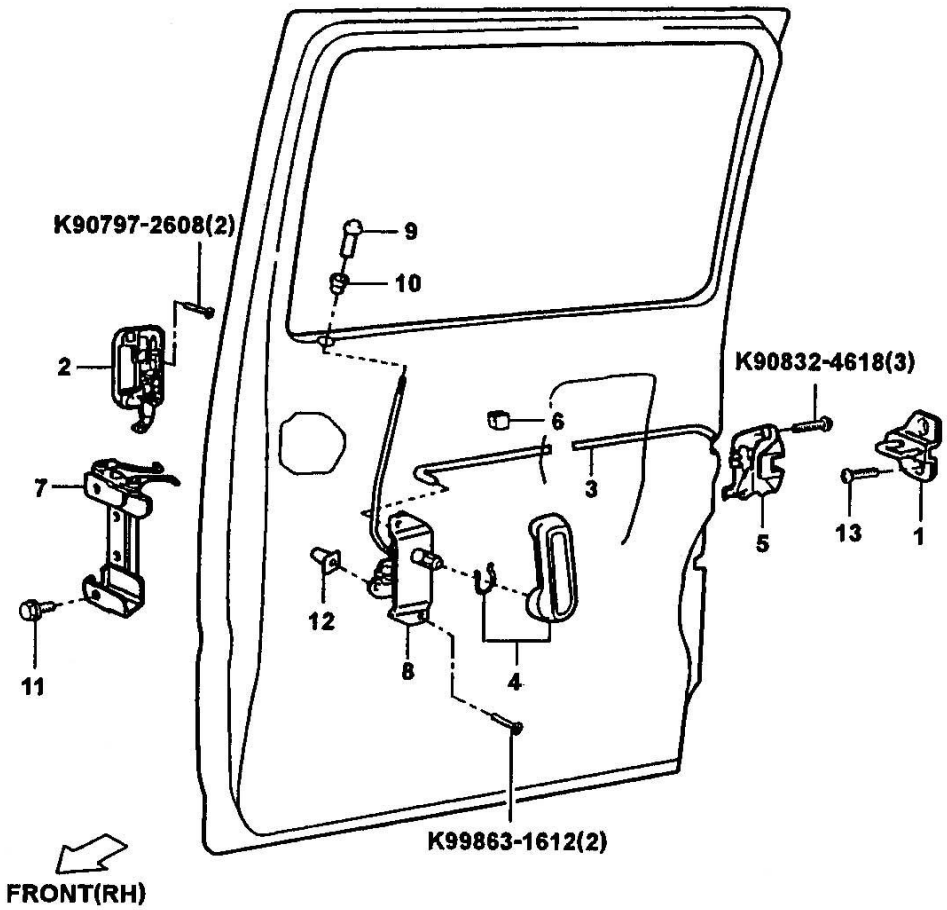

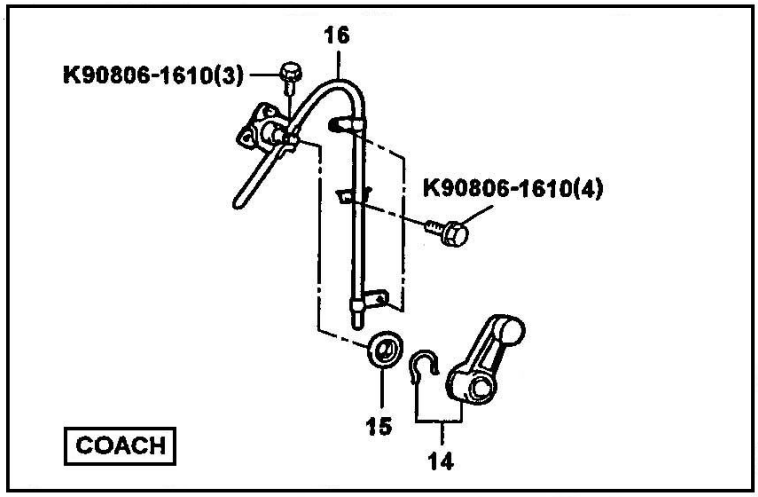

7230A REAR DOOR WINDOW REGULATOR

NO	PART NAME	PART NUMBER	ALL	TRK	VAN	COH	NOTE
1	LOCK STRIKER PLATE ASM	AA110-73-360A			2	2	
2	SLIDING DOOR OUTSIDE HANDLE RH	AA110-73-410D (AA110-73-410C) (AA110-73-410F)			1	1	"C" IS ROD TYPE
	SLIDING DOOR OUTSIDE HANDLE LH	AA110-73-910D (AA110-73-910C) (AA110-73-910F)			1	1	"C" IS ROD TYPE
3	LOCK REMOTE CONTROL LINK	AA110-73-170A			2	2	
4	SLIDING DOOR INSIDE HANDLE	AA110-73-330A (AA110-73-330B)			2	2	B NEW STYLE
5	SLIDING DOOR LOCK ASM RH	AA110-73-310B			1	1	
	SLIDING DOOR LOCK ASM LH	AA110-73-810B			1	1	
6	REMOTE CONTROL LINK SILENCER	AA110-58-317A			2	2	
7	LOCK CONTROL LINK ASM RH	AA110-73-180C			1	1	
	LOCK CONTROL LINK ASM LH	AA110-73-680			1	1	
8	LOCK REMOTE CONTROL ASM RH	AA110-73-380C			1	1	
	LOCK REMOTE CONTROL ASM LH	AA110-73-880D (AA110-73-880E)			1	1	E NEW STYLE
9	DOOR LOCKING BUTTON	AA110-58-316A			2	2	
10	GROMMET	AA100-56-869			2	2	
11	BOLT & WASHER	AA100-56-893			4	4	
12	SCREW GROMMET	AA100-69-361			4	4	
13	SCREW	AA100-56-896			4	4	
14	DOOR WINDOW REGULATOR HANDLE	AA112-73-240B			2	2	5VAN
15	REGULATOR HANDLE PLATE	AA100-58-582			2	2	5VAN
16	WINDOW REGULATOR RH	AA110-73-230			1	1	5VAN
	WINDOW REGULATOR LH	AA110-73-730			1	1	5VAN

NS SLIDIDNG DOOR RELEASE CABLE, AA110-73-420C

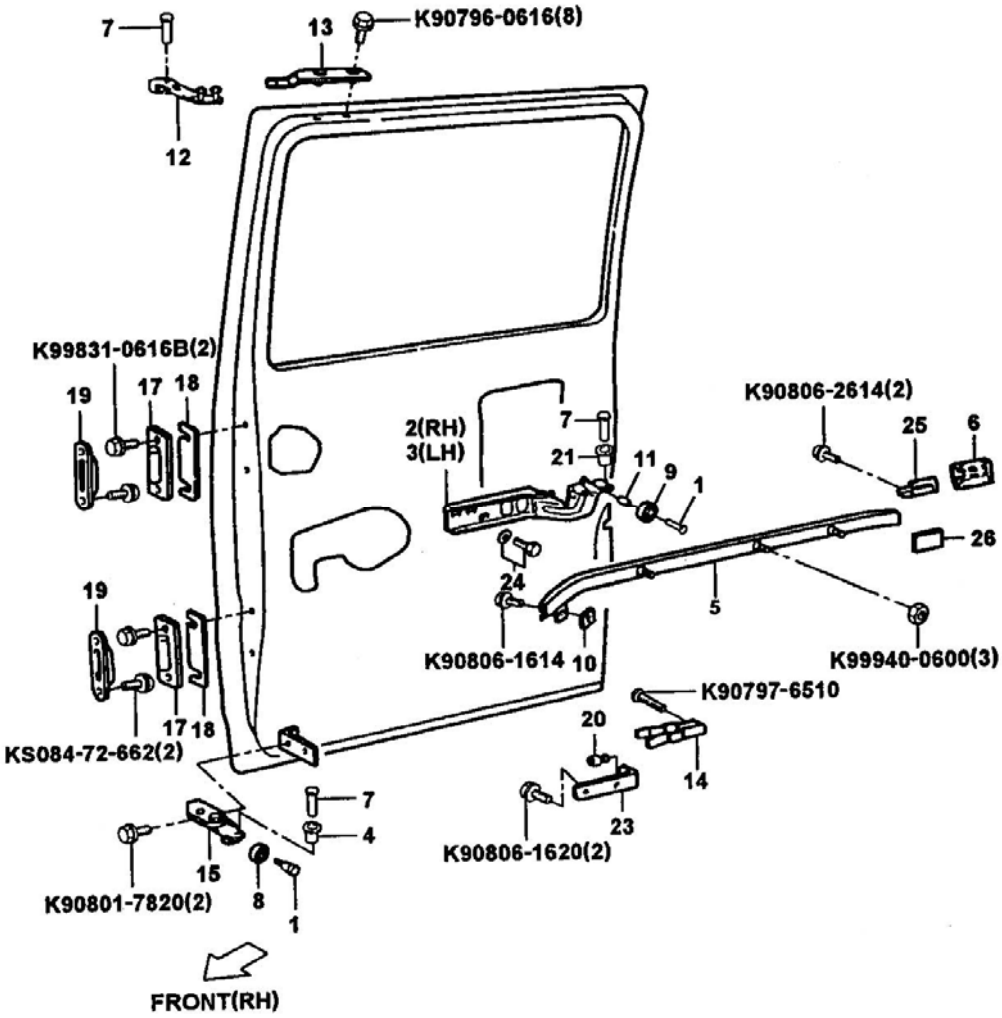
7
13
K90796-0616(8)
12
K99831-0616B(2)
19
17
18
2(RH)
3(LH)
7
21
11
9
1
K90806-2614(2)
25
6
26
24
5
19
K90806-1614
10
K99940-0600(3)
K90797-6510
17
18
KS084-72-662(2)
20
14
7
4
23
K90806-1620(2)
15
K90801-7820(2)
8
1
FRONT(RH)

7230B REAR DOOR MECHANISMS

NO	PART NAME	PART NUMBER	ALL	TRK	VAN	COH	NOTE
1	CENTER GUIDE PIN	AA100-56-815			4	4	
2	SLIDE DOOR CENTER HINGE ASM RH	AA110-72-230A			1	1	
3	SLIDE DOOR CENTER HINGE ASM LH	AA110-72-730A			1	1	
4	REAR DOOR LOWER ROLLER	AA110-72-007			2	2	
5	REAR DOOR CENTER RAIL RH	AA110-73-280			1	1	
	REAR DOOR CENTER RAIL LH	AA110-73-780			1	1	
6	CENTER RAIL END COVER RH	AA110-73-030			1	1	
	CENTER RAIL END COVER LH	AA110-73-530			1	1	
7	REAR DOOR GUIDE ROLLER PIN	AA100-56-814			8	8	
8	RADIAL BALL BEARING	AA100-56-822			2	2	
9	RADIAL BALL BEARING	AA100-56-827			2	2	
10	DOOR CENTER RAIL FRONT PAD	AA110-73-020			2	2	
11	SPACER	AA100-56-876			2	2	
12	REAR DOOR UPPER ARM RH	AA110-72-210			1	1	
	REAR DOOR UPPER ARM LH	AA110-72-710			1	1	
13	REAR DOOR ROLLER UPPER BASE RH	AA110-72-008A			1	1	
	REAR DOOR ROLLER UPPER BASE LH	AA110-72-508A			1	1	
14	REAR DOOR ROLLER CATCH SPRING	AA110-73-110			2	2	
15	REAR DOOR ROLLER LOWER ARM RH	AA110-72-250A			1	1	

NO	PART NAME	PART NUMBER	ALL	TRK	VAN	COH	NOTE
	REAR DOOR ROLLER LOWER ARM LH	AA110-72-750A			1	1	
17	REAR DOOR FEMAL WEDGE	S084-72-671D			4	4	
18	REAR DOOR DOWN STOPPER MALE SHIM	AA110-73-150			2	2	
19	REAR DOOR MALE WEDGE	K710-72-660			2	2	
20	REAR DOOR OPEN STOPPER CUSHION	AA110-73-160			2	2	
21	CENTER GUIDE ROLLER	AA110-72-004			4	4	
22	CUSHION	AA100-56-874			2	2	
23	REAR DOOR OPEN STOPPER PLATE	AA110-73-140			2	2	
24	BOLT & WASHER	AA100-56-894			4	4	
25	CENTER RAIL REAR BRACKET	AA110-73-010			2	2	
26	DOOR CENTER RAIL PAD	AA110-73-282			2	2	